Алматы (7273)495-231
Ангарск (3955)60-70-56
Архангельск (8182)63-90-72
Астрахань (8512)99-46-04
Барнаул (3852)73-04-60
Белгород (4722)40-23-64
Благовещенск (4162)22-76-07
Брянск (4832)59-03-52
Владивосток (423)249-28-31
Владикавказ (8672)28-90-48
Владимир (4922)49-43-18
Волгоград (844)278-03-48
Вологда (8172)26-41-59
Воронеж (473)204-51-73
Екатеринбург (343)384-55-89
Иваново (4932)77-34-06
Ижевск (3412)26-03-58
Иркутск (395)279-98-46
Казань (843)206-01-48
Калининград (4012)72-03-81
Калуга (4842)92-23-67
Кемерово (3842)65-04-62
Киров (8332)68-02-04
Коломна (4966)23-41-49
Кострома (4942)77-07-48
Краснодар (861)203-40-90
Красноярск (391)204-63-61
Курск (4712)77-13-04
Курган (3522)50-90-47
Липецк (4742)52-20-81
Магнитогорск (3519)55-03-13
Москва (495)268-04-70
Мурманск (8152)59-64-93
Набережные Челны (8552)20-53-41
Нижний Новгород (831)429-08-12
Новокузнецк (3843)20-46-81
Ноябрьск (3496)41-32-12
Новосибирск (383)227-86-73
Омск (3812)21-46-40
Орел (4862)44-53-42
Оренбург (3532)37-68-04
Пенза (8412)22-31-16
Петрозаводск (8142)55-98-37
Псков (8112)59-10-37
Пермь (342)205-81-47
Ростов-на-Дону (863)308-18-15
Рязань (4912)46-61-64
Самара (846)206-03-16
Санкт-Петербург (812)309-46-40
Саратов (845)249-38-78
Севастополь (8692)22-31-93
Саранск (8342)22-96-24
Симферополь (3652)67-13-56
Смоленск (4812)29-41-54
Сочи (862)225-72-31
Ставрополь (8652)20-65-13
Сургут (3462)77-98-35
Сыктывкар (8212)25-95-17
Тамбов (4752)50-40-97
Тверь (4822)63-31-35
Тольятти (8482)63-91-07
Томск (3822)98-41-53
Тула (4872)33-79-87
Тюмень (3452)66-21-18
Ульяновск (8422)24-23-59
Улан-Удэ (3012)59-97-51
Уфа (347)229-48-12
Хабаровск (4212)92-98-04
Чебоксары (8352)28-53-07
Челябинск (351)202-03-61
Череповец (8202)49-02-64
Чита (3022)38-34-83
Якутск (4112)23-90-97
Ярославль (4852)69-52-93

Россия +7(495)268-04-70
Казахстан +7(7172)727-132
Киргизия +996(312)96-26-47

https://mac.nt-rt.ru || mcp@nt-rt.ru

Individual mounting

Valve only - No base non "plug-in" Conform to ISO 5599/1	Valve only - No base "plug-in" Conform to ISO 5599/2

Manifold mounting

Valve only - No base non "plug-in" Conform to ISO 5599/1	Valve only - No base "plug-in" Conform to ISO 5599/2

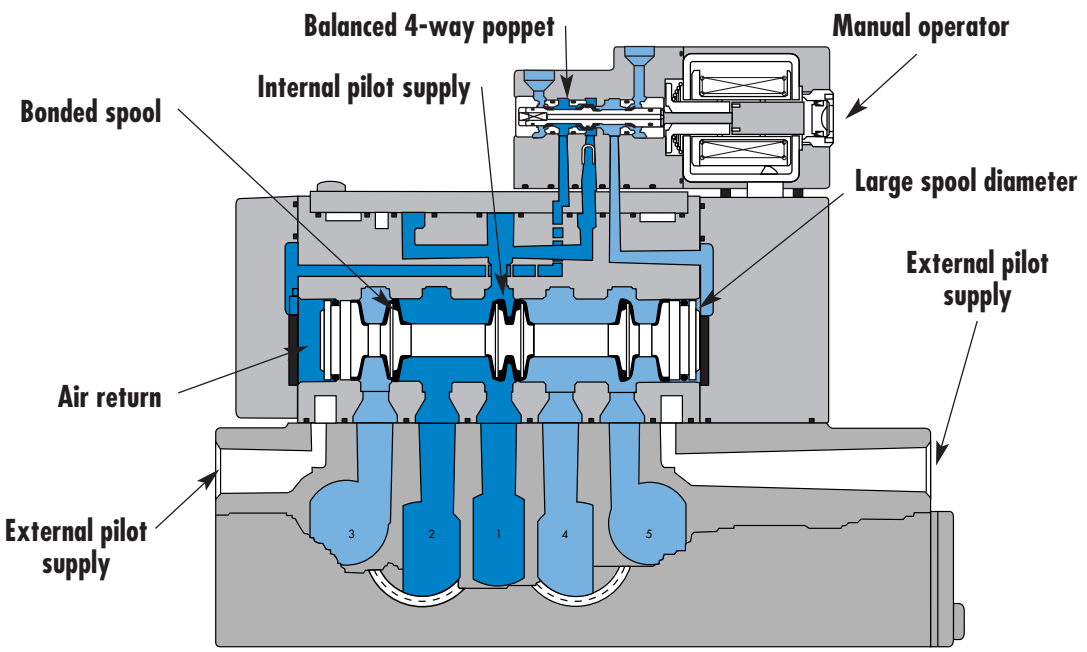

SERIES FEATURES

- Plug-in (5599/2) and non plug-in (5599/1) models.
- 2-position, single or double operator. (Solenoid or Remote Air)
- 3-position, double solenoid, open center, closed center, and pressure center.
- Extended or recessed manual operators.
- Single pressure and dual pressure.
- Individual base or add-a-unit manifold base.
- Plug-in, sandwich, single and dual pressure regulators for both individual and manifold valves.

Consult "Precautions" page 327 before use, installation or service of MAC Valves..

Direct solenoid and solenoid pilot operated valves

Function	Port size	Flow [Max]	Individual/Manifold mounting	Series
5/2, 5/3	**1/2" - 3/4"**	**6.1 C_v**	Valve only – No base "non plug-in" Conform to ISO 5599/1	

OPERATIONAL BENEFITS

1. Unique patented Macsolenoid® for fastest possible response times and virtually burn-out proof AC solenoid operation.
2. Balanced poppet 4-way pilot valve provides maximum shifting forces, precise repeatability and consistent operation.
3. MAC spool and bore combination wipes away contamination, eliminates sticking and allows for use on non-lube service.
4. Large spool area for maximum shifting forces even at minimum operating pressure.
5. Very high flow in a compact package.
6. Plug-in design of valves, bases and regulators for modular assembly and ease of maintenance.
7. Internal or external pilot operation. Manifolds supplied with common external pilot.
8. Air only return. Optional memory spring is also available.
9. Optional low wattage DC solenoid down to 1.0 watt.

HOW TO ORDER

SINGLE PRESSURE MODELS

Pilot air	5/2 Single operator	5/2 Double operator	5/3 Closed center	5/3 Open center
	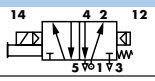	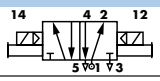	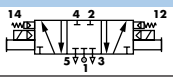	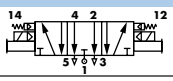
Internal	MV-B3A-AAAA-DM-D*XXX-XXX*	MV-B3A-ABAA-DM-D*XXX-XXX*	MV-B3A-AEAA-DM-D*XXX-XXX*	MV-B3A-AFAA-DM-D*XXX-XXX*
External "12" end	MV-B3A-AAAB-DM-D*XXX-XXX*	MV-B3A-ABAB-DM-D*XXX-XXX*	MV-B3A-AEAB-DM-D*XXX-XXX*	MV-B3A-AFAB-DM-D*XXX-XXX*

DUAL PRESSURE MODELS

Pilot air	5/2 Single operator	5/2 Double operator	5/3 Pressure center
	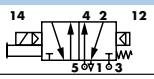	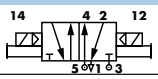	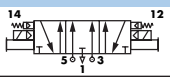
Internal pilot From port #3	MV-B3A-ACAD-DM-D*XXX-XXX*	MV-B3A-ADAD-DM-D*XXX-XXX*	MV-B3A-AGAD-DM-D*XXX-XXX*
Internal pilot From port #5	MV-B3A-ACAE-DM-D*XXX-XXX*	MV-B3A-ADAE-DM-D*XXX-XXX*	MV-B3A-AGAE-DM-D*XXX-XXX*
External pilot From "12" end	MV-B3A-ACAB-DM-D*XXX-XXX*	MV-B3A-ADAB-DM-D*XXX-XXX*	MV-B3A-AGAB-DM-D*XXX-XXX*

SOLENOID OPERATOR ➤

DM-D ***XXX-XXX****

XX	Voltage
JA	110/50, 120/60
JB	220/50, 240/60
JC	24/50, 24/60
FB	24 VDC (1.8W)
DA	24 VDC (5.4W)
DF	24 VDC (12.7W)

X	Lead wire length
A	18" (Flying leads)
B	24" (Flying leads)
J	Connector

X	Manual operator
1	Non-locking recessed
2	Locking recessed

XX	Electrical connection
KA	Square connector
KD	Square connector with light
JB	Rectangular connector
JD	Rectangular connector with light
BA	Flying leads

* Other options available, see page 309.
Note: ISO series, valve and base are ordered separately, see page 239 for base code.

OPTIONS

Valve function :

MV-B3A-A**X**XX-XX-D*XXX-XXX*

- **J** for single operator universal spool (ext. pilot only)
- **K** for double operator universal spool (ext. pilot only)

Spool return :

MV-B3A-AX**A**X-XX-D*XXX-XXX*

- **A** Standard return
- **B** Memory spring return

Pilot style :

MV-B3A-AXXX-**DM**-D*XXX-XXX*

- **DM** Pilot exhaust muffled
- **DP** Pilot exhaust piped (#10-32)

33
34
36
32
37
38
52
67
69
44
46
42
47
48P
48
400
92
93
ISO 01
ISO 02
ISO 1
ISO 2
ISO 3

Consult "Precautions" page 327 before use, installation or service of MAC Valves..

Series ISO 3

100% OF PRODUCTION TESTED 100%

WARRANTY 18 MONTHS

TECHNICAL DATA

Fluid :	Compressed air, vacuum, inert gases
Pressure range :	Internal pilot: 20 to 120 PSI External pilot : vacuum to 120 PSI
Pilot pressure :	Single/double operator : 20 to 120 PSI, 3 positions : 30 to 120 PSI
Lubrication :	Not required, if used select a medium aniline point lubricant (between 180°F and 210°F)
Filtration :	40 µ
Temperature range :	0°F to 120°F (-18°C to +50°C)
Flow :	1/2": (5.4 C_V) – 3/4": (6.1 C_V)
Coil :	Class A continuous duty, #22 AWG leads
Voltage range :	-15% to +10% of nominal voltage
Protection :	Consult factory
Power :	~ Inrush 7.6 VA Holding: 4.8 VA = 12.7 to 1.0 W
Response times : **(5.4 W coil)**	Energize : 16.2 ms De-energize : 13.6 ms

Options : • Sandwich regulator, see ‚Regulators' section

Spare parts : • Pilot valve: DMB-Dxxx-xxx • Valve to base pressure seal: 16614
• Valve mounting screws (x4): 35451

DIMENSIONS

Dimensions shown are metric (mm)

Individual base

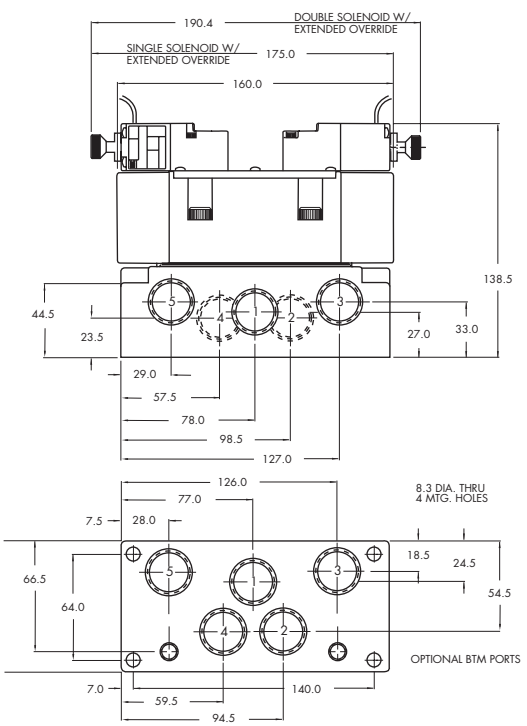

Manifold base

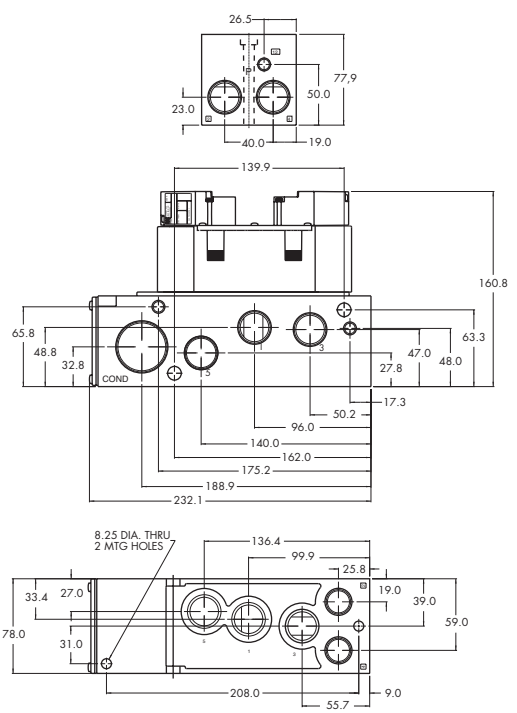

Consult "Precautions" page 327 before use, installation or service of MAC Valves..

Direct solenoid and solenoid pilot operated valves

Function	Port size	Flow [Max]	Individual/Manifold mounting	Series
5/2, 5/3	**1/2" - 3/4"**	**6.1 C_v**	Valve only - No base "plug-in" Conform to ISO 5599/2	

OPERATIONAL BENEFITS

1. Unique patented Macsolenoid® for fastest possible response times and virtually burn-out proof AC solenoid operation.
2. Balanced poppet 4-way pilot valve provides maximum shifting forces, precise repeatability and consistent operation.
3. MAC spool and bore combination wipes away contamination, eliminates sticking and allows for use on non-lube service.
4. Large spool area for maximum shifting forces even at minimum operating pressure.
5. Very high flow in a compact package.
6. Plug-in design of valves, bases and regulators for modular assembly and ease of maintenance.
7. Internal or external pilot operation. Manifolds supplied with common external pilot.
8. Air only return. Optional memory spring is also available.
9. Optional low wattage DC solenoid down to 1.0 watt.

HOW TO ORDER

SINGLE PRESSURE MODELS

Pilot air	5/2 Single operator	5/2 Double operator	5/3 Closed center	5/3 Open center
	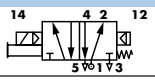	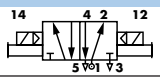	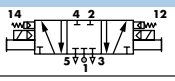	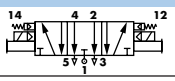
Internal	MV-P3A-AAAA-DM-D*xx*P-*xxx*	MV-P3A-ABAA-DM-D*xx*P-*xxx*	MV-P3A-AEAA-DM-D*xx*P-*xxx*	MV-P3A-AFAA-DM-D*xx*P-*xxx*
External "12" end	MV-P3A-AAAB-DM-D*xx*P-*xxx*	MV-P3A-ABAB-DM-D*xx*P-*xxx*	MV-P3A-AEAB-DM-D*xx*P-*xxx*	MV-P3A-AFAB-DM-D*xx*P-*xxx*

DUAL PRESSURE MODELS

Pilot air	5/2 Single operator	5/2 Double operator	5/3 Pressure center
	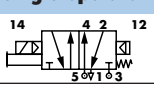	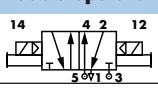	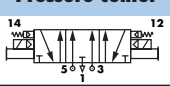
Internal pilot From port #3	MV-P3A-ACAD-DM-D*xx*P-*xxx*	MV-P3A-ADAD-DM-D*xx*P-*xxx*	MV-P3A-AGAD-DM-D*xx*P-*xxx*
Internal pilot From port #5	MV-P3A-ACAE-DM-D*xx*P-*xxx*	MV-P3A-ADAE-DM-D*xx*P-*xxx*	MV-P3A-AGAE-DM-D*xx*P-*xxx*
External pilot From "12" end	MV-P3A-ACAB-DM-D*xx*P-*xxx*	MV-P3A-ADAB-DM-D*xx*P-*xxx*	MV-P3A-AGAB-DM-D*xx*P-*xxx*

SOLENOID OPERATOR ➤ DM-D ***XX*** P-***XXX****

XX	Voltage
JA	110/50, 120/60 (2.9W)
JB	220/50, 240/60 (2.9W)
JC	24/50, 24/60 (2.9W)
FB	24 VDC (1.8W)
DA	24 VDC (5.4W)
DF	24 VDC (12.7W)

X	Manual operator
1	Non-locking recessed
2	Locking recessed

XX	Electrical connection
DM	Plug-in
DN	Plug-in with diode
DP	Plug-in with M.O.V.
DG	Plug-in with ground

* Other options available, see page 309.
Note: - ISO series, valve and base are ordered separately, see page 241 for base codes.
- Ground wire required for 30 volts or higher.

OPTIONS

Valve function :

MV-P3A-A**X**XX-XX-D*xx*P-*xxx*

- **J** for single operator universal spool (ext. pilot only)
- **K** for double operator universal spool (ext. pilot only)

Pilot style :

MV-P3A-AXXX-**DM**-D*xx*P-*xxx*

- **DM** Pilot exhaust muffled
- **DP** Pilot exhaust piped (#10-32)

Spool return :

MV-P3A-AX**A**X-XX-D*xx*P-*xxx*

- **A** Standard return
- **B** Memory spring return
- **D** Standard return with light
- **E** Memory spring return with light

33
34
36
32
37
38
52
67
69
44
46
42
47
48P
48
400
92
93
ISO 01
ISO 02
ISO 1
ISO 2
ISO 3

Consult "Precautions" page 327 before use, installation or service of MAC Valves..

Series ISO 3

100% OF PRODUCTION TESTED 100%

WARRANTY 18 MONTHS

TECHNICAL DATA

Fluid :	Compressed air, vacuum, inert gases
Pressure range :	Internal pilot: 20 to 120 PSI External pilot : vacuum to 120 PSI
Pilot pressure :	Single/double operator : 20 to 120 PSI, 3 positions : 30 to 120 PSI
Lubrication :	Not required, if used select a medium aniline point lubricant (between 180°F and 210°F)
Filtration :	40 µ
Temperature range :	0°F to 120°F (-18°C to +50°C)
Flow :	1/2": (5.4 C_v) – 3/4": (6.1 C_v)
Coil :	Class A continuous duty, #22 AWG leads
Voltage range :	-15% to +10% of nominal voltage
Protection :	Consult factory
Power :	~ Inrush 7.6 VA Holding: 4.8 VA = 12.7 to 1.0 W
Response times : **(5.4 W coil)**	Energize : 16.2 ms De-energize : 13.6 ms

Options : • Sandwich regulator, see ‚Regulators' section

Spare parts : • Pilot valve: DMB-DxxP-xxx • Valve to base pressure seal: 16614
• Valve mounting screws (x4): 35451

DIMENSIONS

Dimensions shown are metric (mm)

Individual base

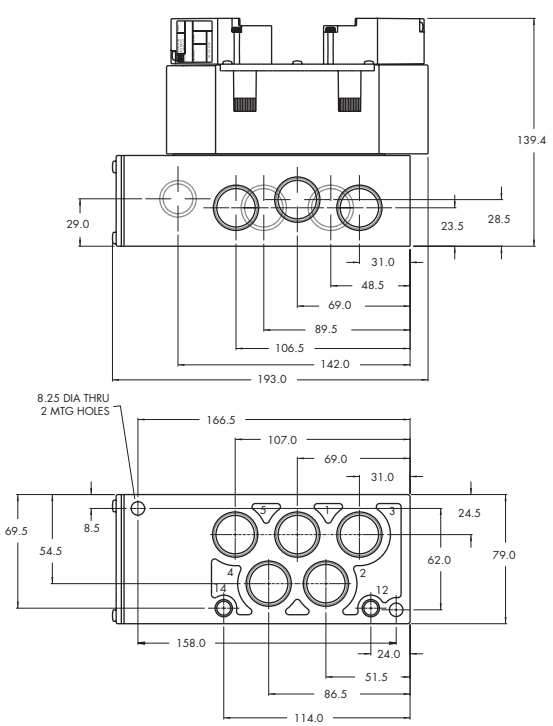

Manifold base

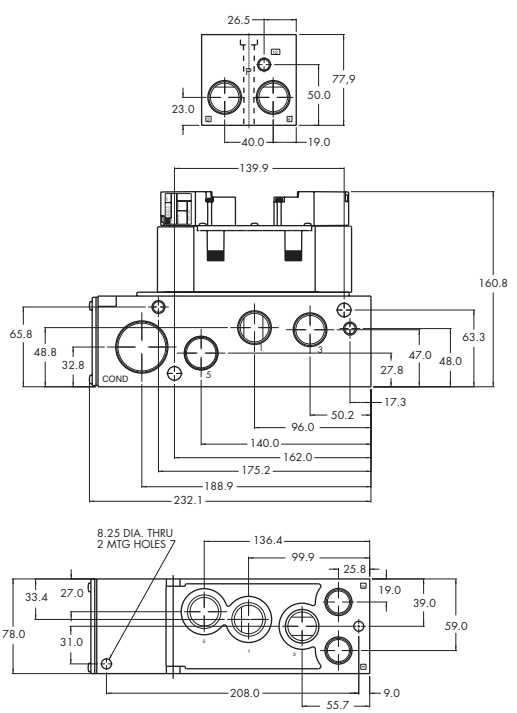

Consult "Precautions" page 327 before use, installation or service of MAC Valves..

MAC®

Series ISO 1-2-3

MV-A1C ISO 1
MV-A2B ISO 2
MV-A3B ISO 3

MAC ISO valves are built to International Standards Organization (ISO) Std. 5599/1. They are available in 3 sizes; ISO 1, 2 & 3. To select th ISO size required, insert the appropriate ISO number in the 5th position of the model code; EXAMPLE MV-A1C for ISO 1, MV-A2B for ISO 2, or MV-A3B for ISO 3.
Bases and manifolds must be ordered separately from the table below.

HOW TO ORDER

SOLENOID PILOT OPERATED VALVES LESS BASE

SINGLE PRESSURE VALVES

SGL. OPERATOR AIR/SPRING RETURN	DBL. OPERATOR 2-POSITION	PILOT SUPPLY	DBL. OPER. 3-POS. CLOSED CENTER	DBL. OPER. 3-POS. OPEN CENTER
MV-AXB-A111-FM-A51JA MV-AXB-A121-FM-A51JA MV-AXB-A151-FM-A51JA	MV-AXB-A211-FM-A51JA MV-AXB-A221-FM-A51JA MV-AXB-A251-FM-A51JA	Internal Pilot External Pilot External Pilot for use with Regulator	MV-AXB-A312-FM-A51JA MV-AXB-A322-FM-A51JA MV-AXB-A352-FM-A51JA	MV-AXB-A311-FM-A51JA MV-AXB-A321-FM-A51JA MV-AXB-A351-FM-A51JA

DUAL PRESSURE VALVES

SGL. OPERATOR AIR/SPRING RETURN	DBL. OPERATOR 2-POSITION	PILOT SUPPLY	DBL. OPER. 3-POS. PRESSURE CENTER
MV-AXB-A131-FM-A51JA MV-AXB-A135-FM-A51JA MV-AXB-A141-FM-A51JA	MV-AXB-A231-FM-A51JA MV-AXB-A232-FM-A51JA MV-AXB-A241-FM-A51JA	Int. Pilot-From Port 3 Int. Pilot-From Port 5 External Pilot	MV-AXB-A331-FM-A51JA MV-AXB-A332-FM-A51JA MV-AXB-A341-FM-A51JA

SOLENOID PILOT VALVE OPTIONS

XX - XXYZZ

XX PILOT EXHAUST	*XX* DC VOLTAGE	*Y* MANUAL OPERATOR	*ZZ* EXTERNAL PLUG-IN	*ZZ* ENCLOSURE
FM Muffled exhaust ***FP*** Piped exhaust	***A5*** 12 VDC (0.6 W) ***A6*** 24 VDC (0.6 W)	***0*** No operator ***1*** Non-locking Recessed (std.) ***2*** Locking Recessed ***3*** Non-locking Extended ***4*** Locking Extended	***JA*** Square without light (on solenoid) ***JB*** Rectangular without light (on solenoid) ***JE*** Square without light (on body) ***JF*** Rectangular without light (on body)	***AA*** JIC w/1/2" NPS Conduit ***BA*** Grommet ***CA*** Conduit 1/2" NPS ***CC*** Conduit 1/2" NPT (CSA Threads)

BASE TABLE

ISO TYPE	PORT SIZE	INDIVIDUAL BASE BSPP	INDIVIDUAL BASE NPTF	MANIFOLD BASE BSPP	MANIFOLD BASE NPTF
ISO 1	1/4"	MB-A1C-121	MB-A1C-221	MM-A1C-121	MM-A1C-221
	3/8"	MB-A1C-131	MB-A1C-231	MM-A1C-131	MM-A1C-231
ISO 2	3/8"	MB-A2B-121	MB-A2B-221	MM-A2B-121	MM-A2B-221
	1/2"	MB-A2B-131	MB-A2B-231	MM-A2B-131	MM-A2B-231
ISO 3	1/2"	MB-A3B-121	MB-A3B-221	MM-A3B-121	N/A
	3/4"	MB-A3B-131	MB-A3B-231	MM-A3B-131	N/A

For manifold bases a common external pilot port is available. One connection only is required for all valves in the manifold whether single or double solenoid. Bottom ports are also available; consult factory for ordering information for these options.

MANIFOLD FASTENING KIT — For each gang, one kit is required. To order specify par number **N-63002-01.**

Consult "Precautions" page 364 before use, installation or service of MAC Valves

Function	Port size	Flow (Max)	Individual/Manifold mounting	Series
5/2 - 5/3	**1/2" - 3/4"**	**6.2 C_v**	Valve only - no base	

OPERATIONAL BENEFITS

1. Balanced spool, immune to variations of pressure.
2. Powerful return forces thanks to the combination of mechanical and air springs.
3. Bonded spool with minimum friction, shifting in a glass-like finished bore.
4. Wiping effect eliminates sticking.
5. Long service life.

HOW TO ORDER

SINGLE PRESSURE MODELS

Air spring	5/2 Single operator	5/2 Double operator	5/3 Closed center	5/3 Open center
	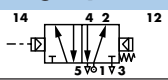	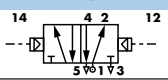	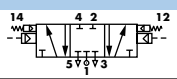	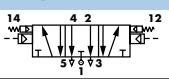
Internal	MV-R3A-BACF	MV-R3A-BBAK	MV-R3A-BEAK	MV-R3A-BFAK
External	MV-R3A-BACG			

DUAL PRESSURE MODELS

Air spring	5/2 Single operator	5/2 Double operator	5/3 Pressure center
	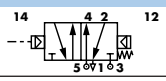	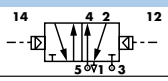	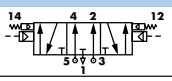
Internal port #3	MV-R3A-BCCH	MV-R3A-BDAK	MV-R3A-BGAK
Internal port #5	MV-R3A-BCCJ		
External	MV-R3A-BCCG		

Note: ISO series, valve and base are ordered separately, see page 239 for base code.

Consult "Precautions" page 327 before use, installation or service of MAC Valves..

Series ISO 3

100% OF PRODUCTION TESTED 100%

WARRANTY 18 MONTHS

TECHNICAL DATA

Fluid :	Compressed air, vacuum, inert gases
Pressure range :	Vacuum to 150 PSI
Air signal pressure :	Single/double operator: 20 to 150 PSI 3 position: 30 to 150 PSI
Lubrication :	Not required, if used select a medium aniline point lubricant (between 180°F and 210°F)
Filtration :	40 µ
Temperature range :	0°F to 120°F (-18°C to 50°C)
Flow :	1/2" : (5.4 C_V) - 3/4" : (6.2 C_V)

Spare parts : • Valve to base pressure seal: 16614 • Valve mounting screws (x4): 35451

DIMENSIONS

Dimensions shown are metric (mm)

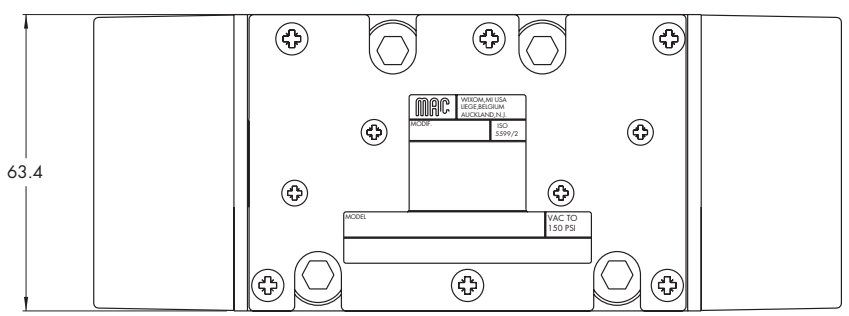

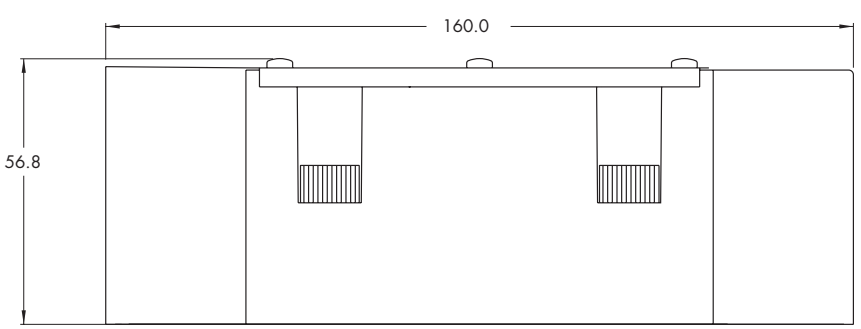

Consult "Precautions" page 327 before use, installation or service of MAC Valves..

Non plug-in base / manifold

HOW TO ORDER

INDIVIDUAL BASE

Port size	Side ports	Bottom ports	Bottom cylinder ports 2 and 4.	Bottom inlet port 1
1/2" NPTF	MB-A3B-221	MB-A3B-223	MB-A3B-222	MB-A3B-224
3/4" NPTF	MB-A3B-231	MB-A3B-233	MB-A3B-232	MB-A3B-234

MANIFOLD BASE

Port size	Side ports	Bottom ports	Bottom cylinder ports 2 and 4.	Bottom inlet port 1
1/2" NPTF	MM-B3A-221-A	MM-B3A-223-A	MM-B3A-222-A	MM-B3A-224-A
3/4" NPTF	MM-B3A-231-A	MM-B3A-233-A	MM-B3A-232-A	MM-B3A-234-A

Manifold fastening kit: N-P3003-01.
Valve blanking plate: M-P3001.
Inlet/exhaust isolator plug: 32845.

Individual Base Options:
MB-A3B-XXXF
└ Optional Integral Flow Controls

Consult "Precautions" page 327 before use, installation or service of MAC Valves..

100% OF PRODUCTION TESTED 100%

WARRANTY 18 MONTHS

DIMENSIONS

Dimensions shown are metric (mm)

Individual

ISO DIN 5599/1

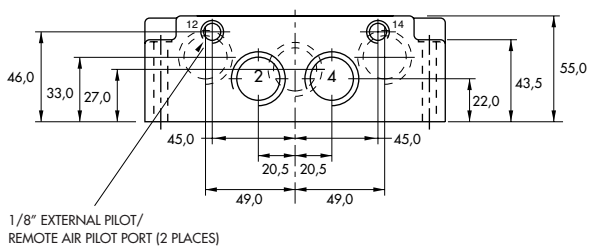

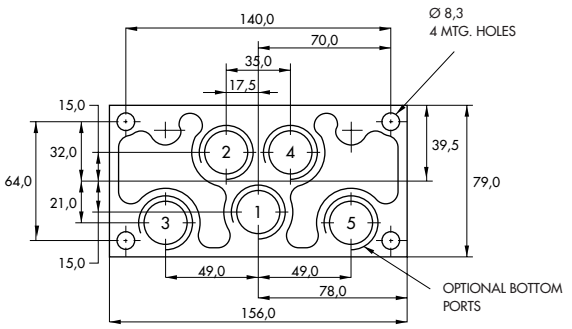

Manifold

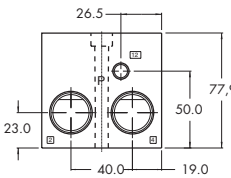

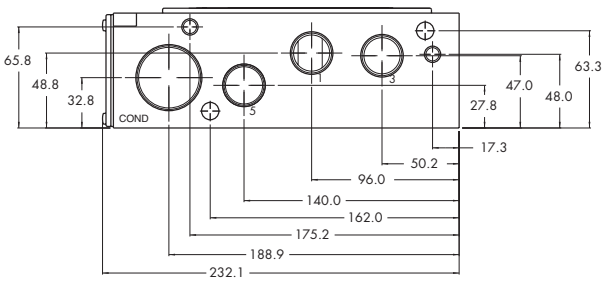

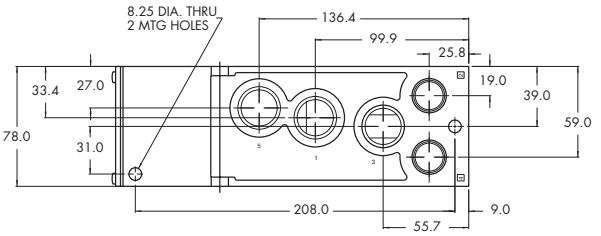

Consult "Precautions" page 327 before use, installation or service of MAC Valves..

Plug-in manifold

HOW TO ORDER

MANIFOLD BASE

Port size	Wired for	Side ports	Side ports w/ bottom 2 & 4 ports	All side & bottom ports (see note)
1/2" NPTF	Single solenoid	MM-P3A-221-A	MM-P3A-222-A	MM-P3A-223-A
	Double solenoid	MM-P3A-221-B	MM-P3A-222-B	MM-P3A-223-B
3/4" NPTF	Single solenoid	MM-P3A-231-A	MM-P3A-232-A	MM-P3A-233-A
	Double solenoid	MM-P3A-231-B	MM-P3A-232-B	MM-P3A-233-B

Note : Ports 1, 3 & 5 are always 3/4"

OPTIONS

Manifold options :

External pilot — MM-P3A-**22***x-x*

- **25** for 1/2" port – common external pilot
- **26** for 3/4" port – common external pilot

Terminal strip — MM-P3A-*xxx*-**A**

- **J** wired for sgl solenoid
- **K** wired for double solenoid

light(s) — MM-P3A-*xxx-x***JA**

- **JA** 110/120 volt
- **JB** 220/240 volt
- **DA** 24 volt

Accessories:

M-P3001	Valve blanking plate.
N-P3003-01	Manifold fastening kit.
32845	Inlet/exhaust isolator plug.

Consult "Precautions" page 327 before use, installation or service of MAC Valves..

100% OF PRODUCTION TESTED 100%

WARRANTY 18 MONTHS

DIMENSIONS

Dimensions shown are metric (mm)

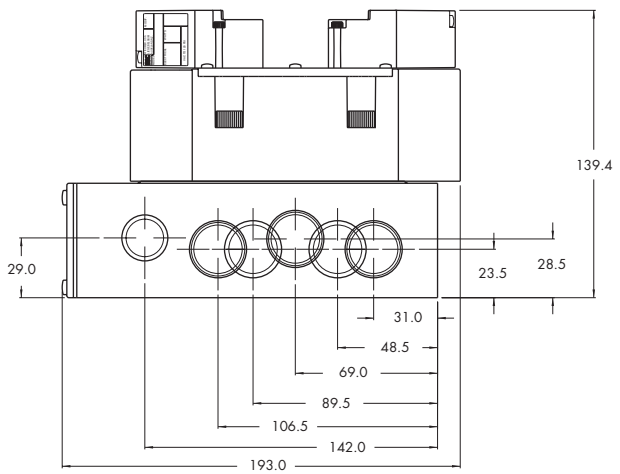

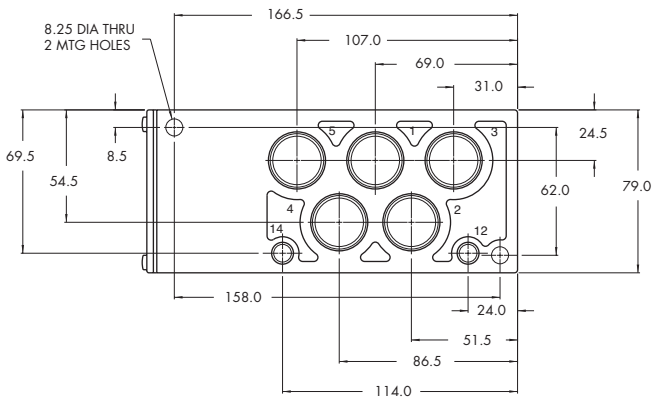

Consult "Precautions" page 327 before use, installation or service of MAC Valves..

Non plug-in sandwich pressure regulator with manual adjust knob

OPERATIONAL BENEFITS

1. Easy mounting : saves on installation costs in comparison with inline regulators.
2. Allows to have compact, all-included units.
3. Large orifice provides high flow.
4. Various functions available.
5. Simple, reliable and solid design.

HOW TO ORDER

INTERNAL PILOT

Gage	Single pressure Regulator 14 end Same regulated pressure to ports 2 and 4	Single pressure Regulator 12 end Same regulated pressure to ports 2 and 4	Dual pressure * Regulator 14 end Regulated pressure to port 4	Dual pressure * Regulator 12 end Regulated pressure to port 2	Dual pressure * Dual regulator Two regulated pressures to ports 2 and 4
No gage	PRA3C-1AAA	PRA3C-1EAA	PRA3C-1BAA	PRA3C-1FAA	PRA3C-1JAA
Non-filled gage on regulator(s)	PRA3C-1ADA	PRA3C-1EDA	PRA3C-1BDA	PRA3C-1FDA	PRA3C-1JEA
Non-filled gage opposite to regulator	PRA3C-1CDA	PRA3C-1GDA	PRA3C-1DDA	PRA3C-1HDA	-----
Glycerine filled gage on regulator(s)	PRA3C-1ABA	PRA3C-1EBA	PRA3C-1BBA	PRA3C-1FBA	PRA3C-1JCA
Glycerine filled gage opposite to regulator	PRA3C-1CBA	PRA3C-1GBA	PRA3C-1DBA	PRA3C-1HBA	-----

EXTERNAL PILOT AND REMOTE AIR

Gage	Single pressure Regulator 14 end Same regulated pressure to ports 2 and 4	Single pressure Regulator 12 end Same regulated pressure to ports 2 and 4	Dual pressure * Regulator 14 end Regulated pressure to port 4	Dual pressure * Regulator 12 end Regulated pressure to port 2	Dual pressure * Dual regulator Two regulated pressures to ports 2 and 4
No gage	PRA3C-2AAA	PRA3C-2EAA	PRA3C-2BAA	PRA3C-2FAA	PRA3C-2JAA
Non-filled gage on regulator(s)	PRA3C-2ADA	PRA3C-2EDA	PRA3C-2BDA	PRA3C-2FDA	PRA3C-2JEA
Non-filled gage opposite to regulator	PRA3C-2CDA	PRA3C-2GDA	PRA3C-2DDA	PRA3C-2HDA	-----
Glycerine filled gage on regulator(s)	PRA3C-2ABA	PRA3C-2EBA	PRA3C-2BBA	PRA3C-2FBA	PRA3C-2JCA
Glycerine filled gage opposite to regulator	PRA3C-2CBA	PRA3C-2GBA	PRA3C-2DBA	PRA3C-2HBA	-----

* - To be used with dual pressure valves.
Note : regulating range for above models is 0-150 PSI.
For other ranges see technical data page.

Main valve body assembly must be external pilot model. Pilots are supplied internally from primary pressure in regulator block. Cannot field convert regulator block from Single Pressure to dual pressure. Body/Block to base mounting screw #35418.

ADJUSTMENT OPTIONS

PRA3C-*xxxx*

- **A** for slotted stem adjustment (internal pilot)
- **B** for slotted stem adjustment (external pilot)
- **D** for slotted stem with locknut (internal pilot)
- **E** for slotted stem with locknut (external pilot)

Consult "Precautions" page 327 before use, installation or service of MAC Valves..

Series **PRA3C**

100% OF PRODUCTION TESTED 100%

WARRANTY 18 MONTHS

TECHNICAL DATA

Fluid :	Compressed air, inert gases
Pressure range :	0 to 150 PSI
Regulating range :	0 to 150 PSI (other ranges see below)
Lubrication :	Not required, if used select a medium aniline point lubricant (between 180°F to 210°F)
Filtration :	40 µ
Temperature range :	0°F to 120°F (-18°C to +50°C)
Flow :	5.4 C_v

Spare parts :

- Pressure regulator (less sandwich block) : PRA3C-30AA (KNOB), PRA3C-C0AA (SLOTTED STEM), PRA3C-F0AA (SLOTTED STEM WITH LOCKNUT).
- Gage :
  - Glycerine filled : N-62015-01
  - Non filled : N-62016-01

Regulating range options : PRA3C-XXXA
- Replace by B - 0 to 100 PSI
- Replace by C - 0 to 45 PSI

DIMENSIONS

Dimensions shown are metric (mm)

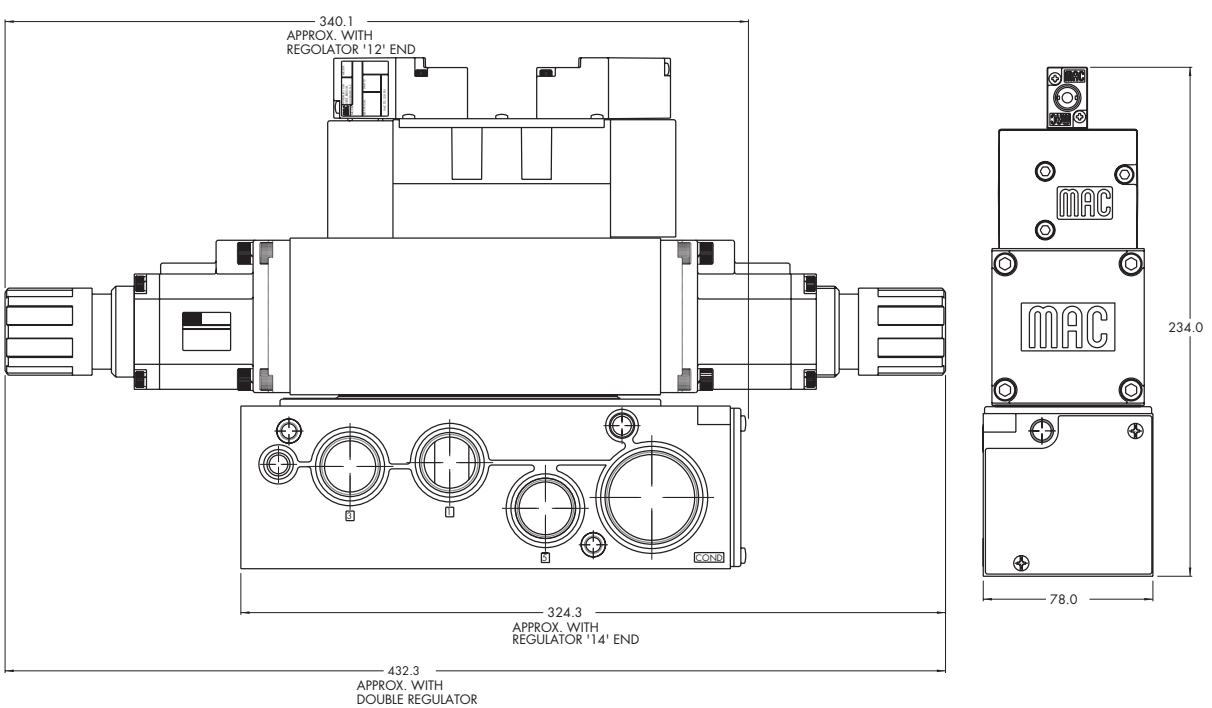

Consult "Precautions" page 327 before use, installation or service of MAC Valves..

Non plug-in sandwich pressure regulator with air pilot adjust

OPERATIONAL BENEFITS

1. Easy mounting : saves on installation costs in comparison with inline regulators.
2. Allows to have compact, all-included units.
3. Large orifice provides high flow.
4. Various functions available.
5. Simple, reliable and solid design.

HOW TO ORDER

INTERNAL PILOT

Gage	Single pressure Regulator 14 end Same regulated pressure to ports 2 and 4	Single pressure Regulator 12 end Same regulated pressure to ports 2 and 4	Dual pressure * Regulator 14 end Regulated pressure to port 4	Dual pressure * Regulator 12 end Regulated pressure to port 2	Dual pressure * Dual regulator Two regulated pressures to ports 2 and 4
No gage	PRA3C-4AAA	PRA3C-4EAA	PRA3C-4BAA	PRA3C-4FAA	PRA3C-4JAA
Non-filled gage on regulator(s)	PRA3C-4ADA	PRA3C-4EDA	PRA3C-4BDA	PRA3C-4FDA	PRA3C-4JEA
Non-filled gage opposite to regulator	PRA3C-4CDA	PRA3C-4GDA	PRA3C-4DDA	PRA3C-4HDA	-----
Glycerine filled gage on regulator(s)	PRA3C-4ABA	PRA3C-4EBA	PRA3C-4BBA	PRA3C-4FBA	PRA3C-4JCA
Glycerine filled gage opposite to regulator	PRA3C-4CBA	PRA3C-4GBA	PRA3C-4DBA	PRA3C-4HBA	-----

EXTERNAL PILOT AND REMOTE AIR

Gage	Single pressure Regulator 14 end Same regulated pressure to ports 2 and 4	Single pressure Regulator 12 end Same regulated pressure to ports 2 and 4	Dual pressure * Regulator 14 end Regulated pressure to port 4	Dual pressure * Regulator 12 end Regulated pressure to port 2	Dual pressure * Dual regulator Two regulated pressures to ports 2 and 4
No gage	PRA3C-5AAA	PRA3C-5EAA	PRA3C-5BAA	PRA3C-5FAA	PRA3C-5JAA
Non-filled gage on regulator(s)	PRA3C-5ADA	PRA3C-5EDA	PRA3C-5BDA	PRA3C-5FDA	PRA3C-5JEA
Non-filled gage opposite to regulator	PRA3C-5CDA	PRA3C-5GDA	PRA3C-5DDA	PRA3C-5HDA	-----
Glycerine filled gage on regulator(s)	PRA3C-5ABA	PRA3C-5EBA	PRA3C-5BBA	PRA3C-5FBA	PRA3C-5JCA
Glycerine filled gage opposite to regulator	PRA3C-5CBA	PRA3C-5GBA	PRA3C-5DBA	PRA3C-5HBA	-----

* - To be used with dual pressure valves.

Main valve body assembly must be external pilot model. Pilots are supplied internally from primary pressure in regulator block. Cannot field convert regulator block from Single Pressure to dual pressure. Body/Block to base mounting screw #35418.

Series PRA3C

100% OF PRODUCTION TESTED 100%

WARRANTY 18 MONTHS

TECHNICAL DATA

Fluid :	Compressed air, inert gases
Pressure range :	0 to 150 PSI
Regulating range :	0 to 150 PSI
Lubrication :	Not required, if used select a medium aniline point lubricant (between 180°F to 210°F)
Filtration :	40 µ
Temperature range :	0°F to 120°F (-18°C to +50°C)
Flow :	5.4 C_v

Spare parts :

- Pressure regulator (less sandwich block) : PRA3C-60AA.
- Gage : • Glycerine filled : N-62015-01
  • Non filled : N-62016-01

DIMENSIONS

Dimensions shown are metric (mm)

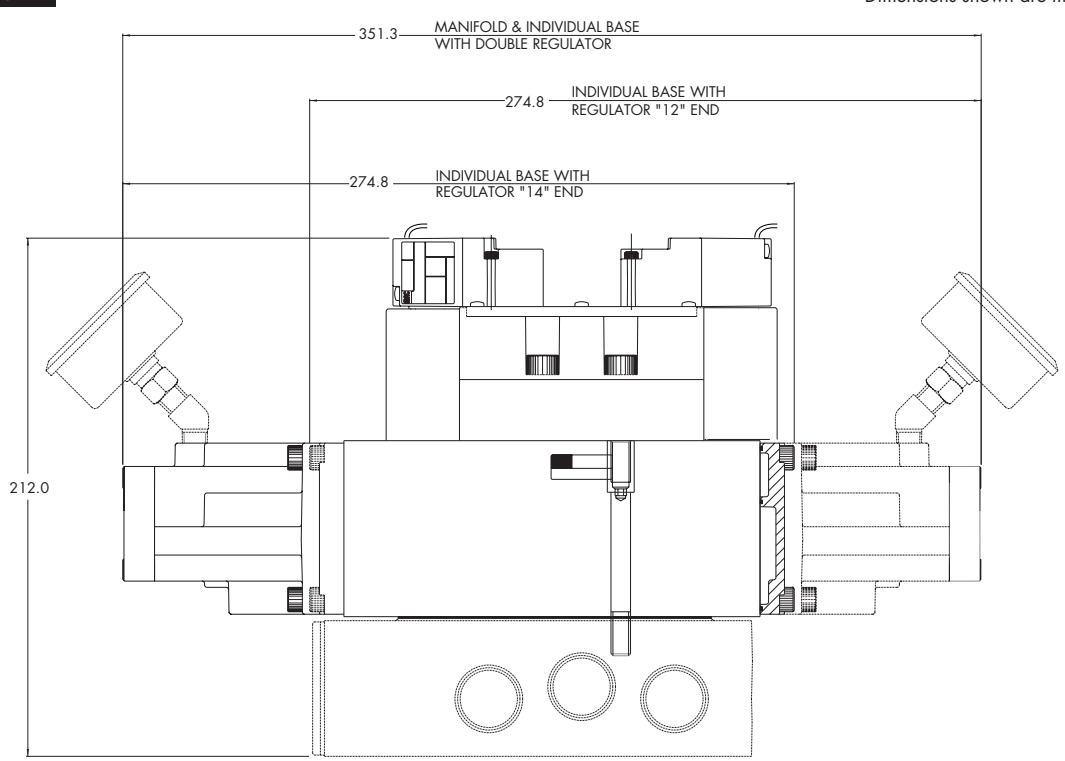

Consult "Precautions" page 327 before use, installation or service of MAC Valves..

Plug-in sandwich pressure regulator with manual adjust knob

OPERATIONAL BENEFITS

1. Easy mounting: saves on installation costs in comparison with inline regulators.
2. Compact all-included units.
3. Large orifice provides high flow.
4. Various functions available.
5. Simple, reliable and solid design.

HOW TO ORDER

REGULATORS FOR INTERNAL PILOT (CODED FOR KNOB ADJUSTMENT)

Gage	Single pressure Regulator 14 end Same regulated pressure to ports 2 and 4	Single pressure Regulator 12 end Same regulated pressure to ports 2 and 4	Dual pressure * Regulator 14 end Regulated pressure to port 4	Dual pressure * Regulator 12 end Regulated pressure to port 2	Dual pressure * Dual regulator Two regulated pressures to ports 2 and 4
No gage	PRP3B-AAAA	PRP3B-AEAA	PRP3B-ABAA	PRP3B-AFAA	PRP3B-AJAA
Glycerine gage	PRP3B-AABA	PRP3B-AEBA	PRP3B-ABBA	PRP3B-AFBA	PRP3B-AJCA
Non-filled gage	PRP3B-AADA	PRP3B-AEDA	PRP3B-ABDA	PRP3B-AFDA	PRP3B-AJEA

REGULATORS FOR EXTERNAL PILOT AND REMOTE AIR (CODED FOR KNOB ADJUSTMENT)

Gage	Single pressure Regulator 14 end Same regulated pressure to ports 2 and 4	Single pressure Regulator 12 end Same regulated pressure to ports 2 and 4	Dual pressure * Regulator 14 end Regulated pressure to port 4	Dual pressure * Regulator 12 end Regulated pressure to port 2	Dual pressure * Dual regulator Two regulated pressures to ports 2 and 4
No gage	PRP3B-BAAA	PRP3B-BEAA	PRP3B-BBAA	PRP3B-BFAA	PRP3B-BJAA
Glycerine gage	PRP3B-BABA	PRP3B-BEBA	PRP3B-BBBA	PRP3B-BFBA	PRP3B-BJCA
Non-filled gage	PRP3B-BADA	PRP3B-BEDA	PRP3B-BBDA	PRP3B-BFDA	PRP3B-BJEA

* For use with dual pressure valves.

ADJUSTMENT OPTIONS

PRP3B-*xxxx*

- **G** for slotted stem (internal pilot)
- **H** for slotted stem (external pilot)
- **K** for slotted stem with locknut (internal pilot)
- **L** for slotted stem with locknut (external pilot)

Notes:
1. Regulating range for above models is 0-150 PSI. For other ranges, see technical data page.
2. Valves used with above models must be external pilot models.
3. Cannot field convert regulator block from single pressure to dual pressure.
4. Cannot field convert from internal pilot to external pilot.
5. Wired for double solenoid valves.

Consult "Precautions" page 327 before use, installation or service of MAC Valves..

Series **PRP3B**

100% OF PRODUCTION TESTED 100%

WARRANTY 18 MONTHS

TECHNICAL DATA

Fluid :	Compressed air, inert gases
Pressure range :	0 to 150 PSI
Regulating range :	0 to 150 PSI (other ranges see below)
Lubrication :	Not required, if used select a medium aniline point lubricant (between 180°F to 210°F)
Filtration :	40 µ
Temperature range :	0°F to 120°F (-18°C to +50°C)
Flow :	5.4 C_V

Spare parts :

- Pressure regulator (less sandwich block): PRP3B-C0AA (knob), PRP3B-J0AA (slotted stem), PRP3B-M0AA (slotted stem with locknut)
- Regulating block to base mounting screw: 19457
- Regulating range options: PRP3B-xxxA
  - Replace by B for 0 to 100 PSI
  - Replace by C for 0 to 45 PSI

DIMENSIONS

Dimensions shown are metric (mm)

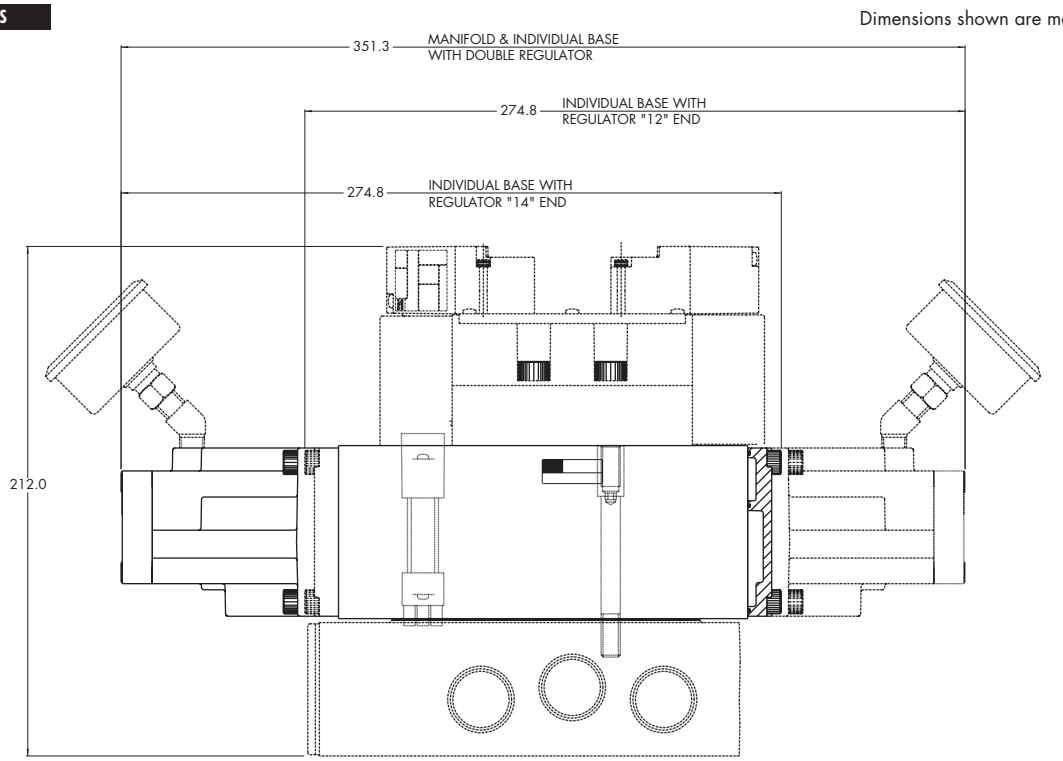

Consult "Precautions" page 327 before use, installation or service of MAC Valves..

Plug-in sandwich pressure regulator with air pilot adjust

OPERATIONAL BENEFITS

1. Easy mounting: saves on installation costs in comparison with inline regulators.
2. Compact all-included units.
3. Large orifice provides high flow.
4. Various functions available.
5. Simple, reliable and solid design.

HOW TO ORDER

REGULATORS FOR INTERNAL PILOT

Gage	Single pressure Regulator 14 end Same regulated pressure to ports 2 and 4	Single pressure Regulator 12 end Same regulated pressure to ports 2 and 4	Dual pressure * Regulator 14 end Regulated pressure to port 4	Dual pressure * Regulator 12 end Regulated pressure to port 2	Dual pressure * Dual regulator Two regulated pressures to ports 2 and 4
No gage	PRP3B-DAAA	PRP3B-DEAA	PRP3B-DBAA	PRP3B-DFAA	PRP3B-DJAA
Glycerine gage	PRP3B-DABA	PRP3B-DEBA	PRP3B-DBBA	PRP3B-DFBA	PRP3B-DJCA
Non-filled gage	PRP3B-DADA	PRP3B-DEDA	PRP3B-DBDA	PRP3B-DFDA	PRP3B-DJEA

REGULATORS FOR EXTERNAL PILOT AND REMOTE AIR

Gage	Single pressure Regulator 14 end Same regulated pressure to ports 2 and 4	Single pressure Regulator 12 end Same regulated pressure to ports 2 and 4	Dual pressure * Regulator 14 end Regulated pressure to port 4	Dual pressure * Regulator 12 end Regulated pressure to port 2	Dual pressure * Dual regulator Two regulated pressures to ports 2 and 4
No gage	PRP3B-EAAA	PRP3B-EEAA	PRP3B-EBAA	PRP3B-EFAA	PRP3B-EJAA
Glycerine gage	PRP3B-EABA	PRP3B-EEBA	PRP3B-EBBA	PRP3B-EFBA	PRP3B-EJCA
Non-filled gage	PRP3B-EADA	PRP3B-EEDA	PRP3B-EBDA	PRP3B-EFDA	PRP3B-EJEA

* - To be used with dual pressure valves.

Notes:
1. Valves used with above models must be external pilot models.
2. Cannot field convert regulator block from single pressure to dual pressure.
3. Cannot field convert from internal pilot to external pilot.
4. Wired for double solenoid valves.

Consult "Precautions" page 327 before use, installation or service of MAC Valves..

Series **PRP3B**

100% OF PRODUCTION TESTED 100%

WARRANTY 18 MONTHS

TECHNICAL DATA

Fluid :	Compressed air, inert gases
Pressure range :	0 to 150 PSI
Regulating range :	0 to 150 PSI
Lubrication :	Not required, if used select a medium aniline point lubricant (between 180°F to 210°F)
Filtration :	40 µ
Temperature range :	0°F to 120°F (-18°C to +50°C)
Flow :	5.4 C_v

Spare parts :

- Pressure regulator (less sandwich block): PRP3B-F0AA
- Regulator block to base mounting screw: 19457

DIMENSIONS

Dimensions shown are metric (mm)

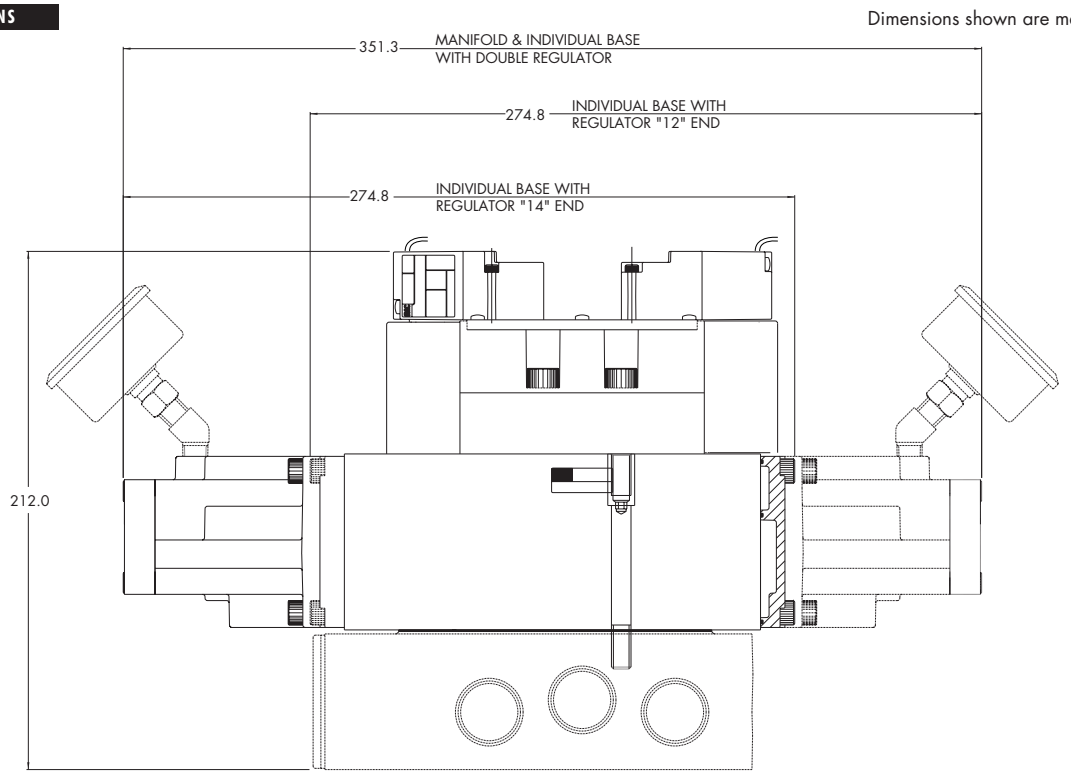

Consult "Precautions" page 327 before use, installation or service of MAC Valves..

OPTIONS

Codification table for voltages / Manual operator / Electrical connection

VALVE CODE ➤ ***-DM- D XX X-X XX***
1 2 3 4

OPTIONS AVAILABLE FOR
- Pilot operated valves 52, 67, 92, 93, 400, ISO1, ISO2, ISO3 Series

Consult "Precautions" page 327 before use, installation or service of MAC Valves..

OPTIONS

1. VOLTAGE

D-XX X-X XX	VOLTAGE
DA	24 VDC (5.4W)
DB	12 VDC (5.4W)
DC	12 VDC (7.5W)
DD	24 VDC (7.3W)
DE	12 VDC (12.7W)
DF	24 VDC (12.7W)
DK	110 VDC (4.7W)
DJ	28 VDC (5.2W)
DL	64 VDC (6.0W)
DM	36 VDC (5.3W)
DN	6 VDC (6.0W)
DR	90 VDC (6.6W)
DS	110 VDC (7.3W)
DT	75 VDC (5.6W)
DP	48 VDC (5.8W)
FA	12 VDC (1.8W)
FB	24 VDC (1.8W)
FE	12 VDC (2.4W)
FF	24 VDC (2.4W)
JA	120/60, 110/50 (2.9W)
JB	240/60, 220/50 (2.9W)
JC	24/60, 24/50 (3.7W)
JD	100/60, 100/50, 110/60 (3.9W)
JE	220/60 (3.4W)
JF	240/50 (2.8W)
JG	200/60, 200/50 (3.9W)

2. WIRE LENGTH

D-XX X-X XX	WIRE LENGTH
0	No wires
A	18"
B	24"
C	36"
D	48"
E	72"
F	96"

3. MANUAL OPERATOR

D-XX X-X XX	MANUAL OPERATOR
0	No operator
1	Non-locking recessed
2	Locking recessed
3	Non-locking extended
4	Locking extended

4. ELECTRICAL CONNECTION

D-XX X-X XX	ELECTRICAL CONNECTION
BA*	Flying leads (grommet)
BK*	BA with protection diode
BL*	BA with protection varistor
BM**	Flying leads (solenoid plug-in)
BN**	BM with protection diode
BP**	BM with protection varistor
BG**	BM with ground
BH**	BM with protection diode & ground
BJ**	BM with protection varistor & ground
CA*	1/2" NPS conduit with flying leads
CM*	1/2" NPS metal conduit with flying leads
CN*	1/2" NPS metal conduit with flying leads & ground
JB	Rectangular connector
JD	JB with light
JM	Rectangular connector (male only)
KA	Mini square connector
KB	KA with protection diode
KC	KA with protection varistor
KD	KA with light
KE	KA with light and protection diode
KF	KA with light and protection varistor
KG	KA with light & diode
KJ	Mini square connector (male only)
KK	KJ with protection diode (male only)
KL	KJ with protection varistor (male only)
TA	Dual tabs with receptacles
TB	TA with protection diode
TD	TA with light
TE	TA with light and protection diode
TJ	Dual tabs (male only)
TK	TJ with protection diode
TM	TJ with light
TN	TJ with light and protection diode

* From Lead wire length options choose A through F

** From Lead wire length options choose 0 through F

Note: When coil is above 30 volts, a ground wire is required. Applies to options with flying leads.

Consult "Precautions" page 327 before use, installation or service of MAC Valves..

How To Order
ISO 3 Non Plug-In Regulator

PRA3C - X X X X - X

Type Adjustment

Manual Adjust w/ Knob

1 Internal Pilot
2 External Pilot or Dbl. Remote Air
3 Regulator Only

Air Pilot Adjust

4 Internal Pilot
5 External Pilot or Dbl. Remote Air
6 Regulator Only

Manual Adjust w/ Screwdriver Slot

A Internal Pilot
B External Pilot or Dbl. Remote Air
C Regulator Only

Manual Adjust w/ Screwdriver Slot w/ Locknut

D Internal Pilot
E External Pilot or Dbl. Remote Air
F Regulator Only

Configuration

0 Regulator Only
A Regulator "14" End Blank Plate "12" End
B Regulator "14" End w/ By-Pass "12" End
C Regulator "14" End Plate "12" End w/ Gage Port In Plate
D Regulator "14" End w/ By-Pass "12" End Gage Port In Plate
E Regulator "12" End Blank Plate "14" End
F Regulator "12" End w/ By-Pass "14" End
G Regulator "12" End Plate "14" End w/ Gage Port In Plate
H Regulator "12" End w/ By-Pass "14" End Gage Port In Plate
J Regulators Both Ends

Gages

A No Gage
B Glycerine Gage (1) For Single Regulator
C Glycerine Gage (2) For Dual Regulators
D Non Filled Gage (1) For Single Regulator
E Non Filled Gage (2) For Dual Regulators

Pressure Range

A 0 to 150 PSI
B 0 to 100 PSI
C 0 to 45 PSI

Assembled

9 Regulator Block is Assembled w/ Valve

Leave Blank If Not Assembled w/ Valve

Notes:
1. Main valve body assembly must be external pilot model, pilots are supplied internally from primary pressure in regulator block.
2. Dual pressure valve must be used with dual regulatoror by-pass option.
3. Cannot field convert regulator block from single pressure to dual pressure.
4. Cannot field convert pilot type (Internal to external pilot).
5. Regulator block to base mounting screw (#35418).

ISO3 NON PLUG-IN BASE WITH REGULATOR
(PRA3C-XXXX)

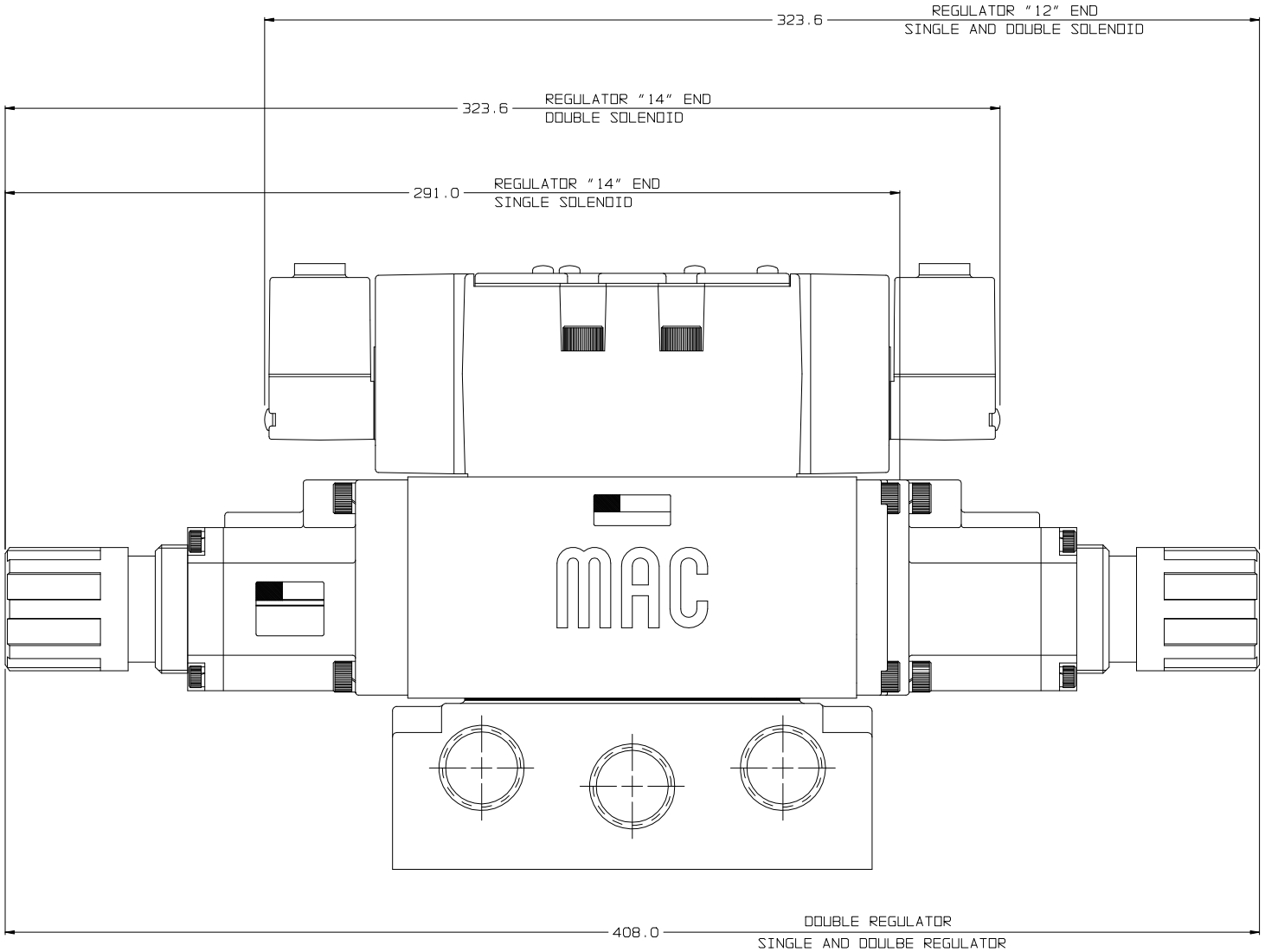

*ALL DIMENSIONS SHOWN
ARE IN MILLIMETERS

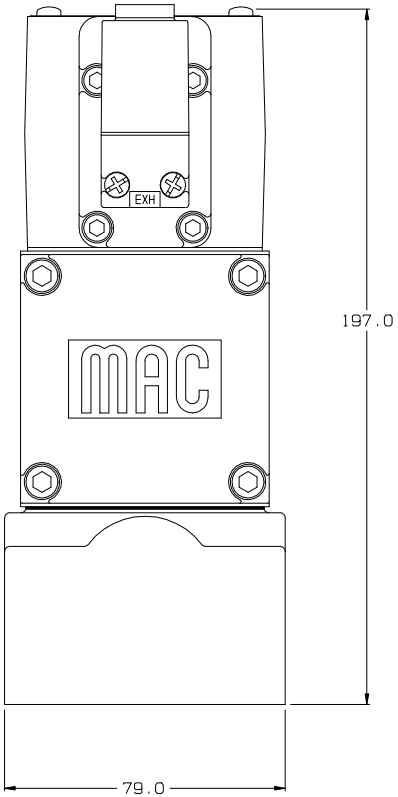

How To Order
ISO 3 Plug-In Regulator

PRP3B - X X X X - X

Type Adjustment

Manual Adjust w/ Knob

A Internal Pilot
B External Pilot or Dbl. Remote Air
C Regulator Only

Air Pilot Adjust

D Internal Pilot
E External Pilot or Dbl. Remote Air
F Regulator Only

Manual Adjust w/ Screwdriver Slot

G Internal Pilot
H External Pilot or Dbl. Remote Air
J Regulator Only

Manual Adjust w/ Screwdriver Slot w/ Locknut

K Internal Pilot
L External Pilot or Dbl. Remote Air
M Regulator Only

Configuration

0 Regulator Only
A Regulator "14" End Blank Plate "12" End
B Regulator "14" End w/ By-Pass "12" End
C Regulator "14" End Plate "12" End w/ Gage Port In Plate
D Regulator "14" End w/ By-Pass "12" End Gage Port In Plate
E Regulator "12" End Blank Plate "14" End
F Regulator "12" End w/ By-Pass "14" End
G Regulator "12" End Plate "14" End w/ Gage Port In Plate
H Regulator "12" End w/ By-Pass "14" End Gage Port In Plate
J Regulators Both Ends

Gages

A No Gage
B Glycerine Gage (1) For Single Regulator
C Glycerine Gage (2) For Dual Regulators
D Non Filled Gage (1) For Single Regulator
E Non Filled Gage (2) For Dual Regulators

Pressure Range

A 0 to 150 PSI
B 0 to 100 PSI
C 0 to 45 PSI

Assembled

9 Regulator Block is Assembled w/ Valve

Leave Blank If Not Assembled w/ Valve

Notes:
1. Main valve body assembly must be external pilot model, pilots are supplied internally from primary pressure in regulator block.
2. Dual pressure valve must be used with dual regulator or by-pass option.
3. Cannot field convert regulator block from single pressure to dual pressure.
4. Regulator block assembly is furnished with double wire assembly.
5. Tie rod to assemble regulator block to base (#19457 - 4mm hex recess).

ISO3 PLUG-IN BASE WITH REGULATOR
(PRP3B-XXXX)

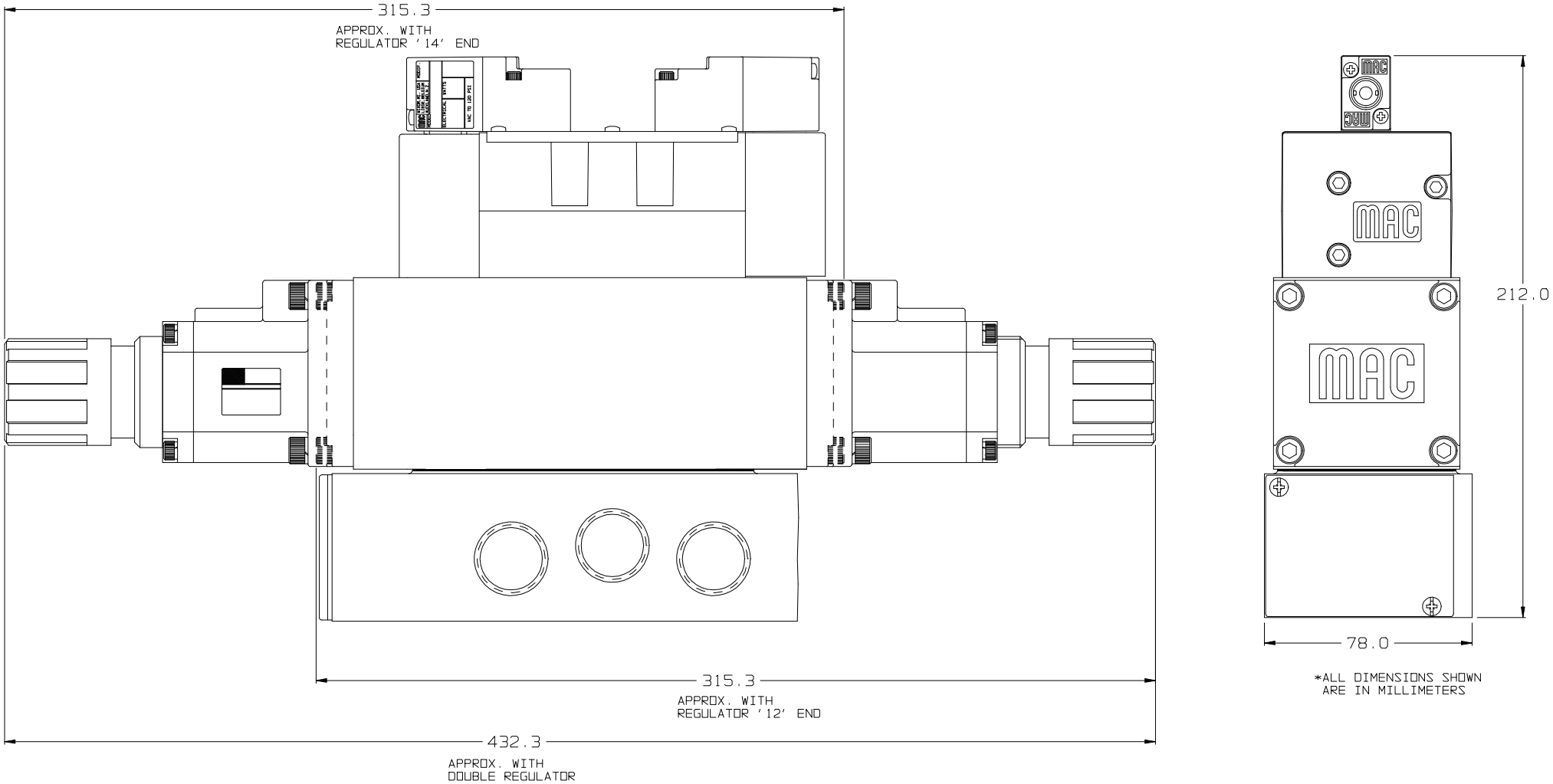

ISO3 PLUG-IN MANIFOLD WITH REGULATOR
(PRP3B-XXXX)

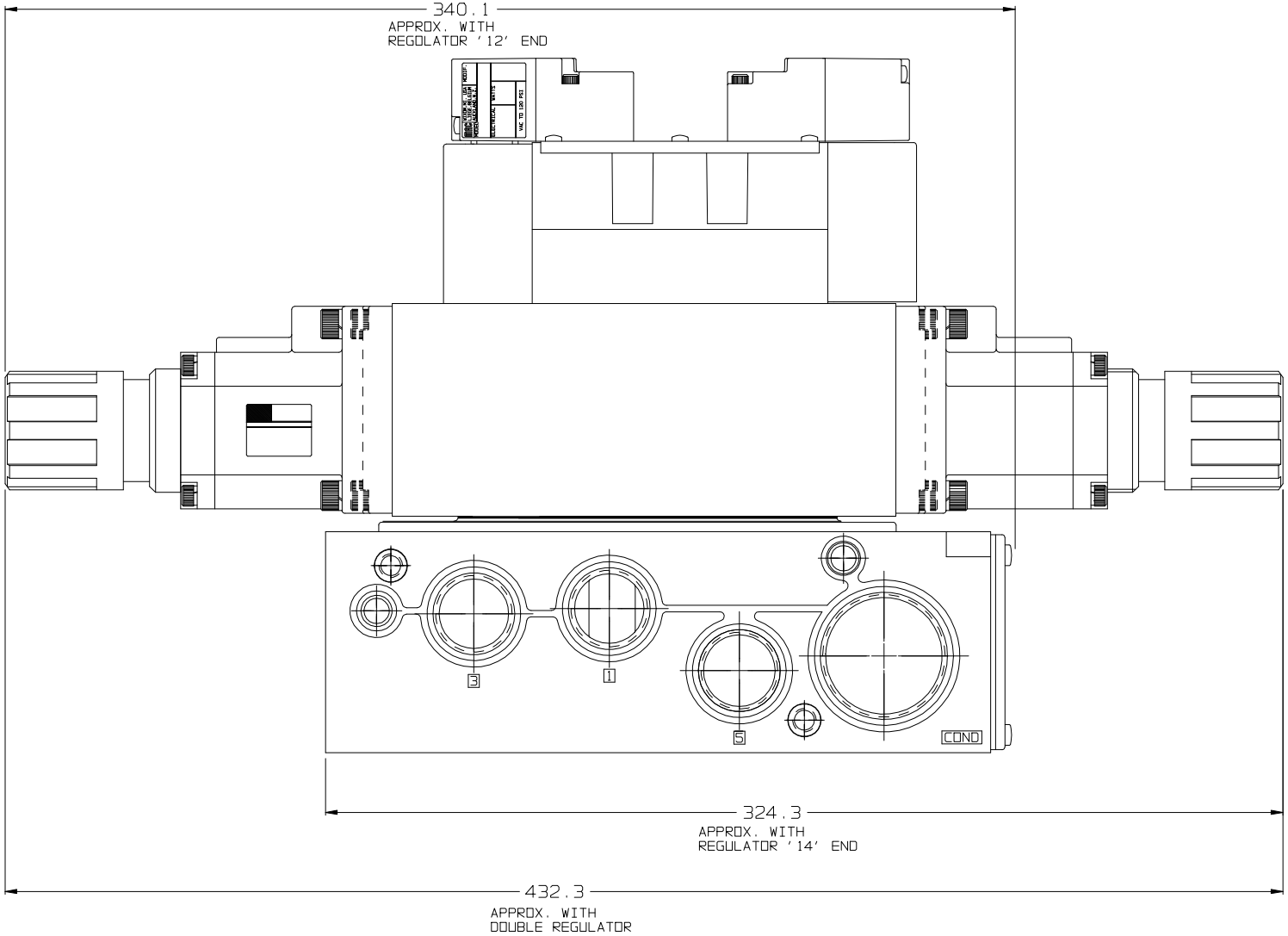

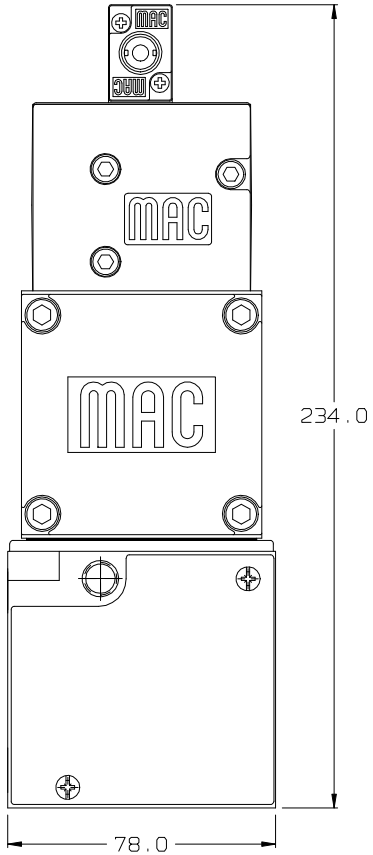

*ALL DIMENSIONS SHOWN
ARE IN MILLIMETERS

Алматы (7273)495-231
Ангарск (3955)60-70-56
Архангельск (8182)63-90-72
Астрахань (8512)99-46-04
Барнаул (3852)73-04-60
Белгород (4722)40-23-64
Благовещенск (4162)22-76-07
Брянск (4832)59-03-52
Владивосток (423)249-28-31
Владикавказ (8672)28-90-48
Владимир (4922)49-43-18
Волгоград (844)278-03-48
Вологда (8172)26-41-59
Воронеж (473)204-51-73
Екатеринбург (343)384-55-89
Иваново (4932)77-34-06
Ижевск (3412)26-03-58
Иркутск (395)279-98-46
Казань (843)206-01-48
Калининград (4012)72-03-81
Калуга (4842)92-23-67
Кемерово (3842)65-04-62
Киров (8332)68-02-04
Коломна (4966)23-41-49
Кострома (4942)77-07-48
Краснодар (861)203-40-90
Красноярск (391)204-63-61
Курск (4712)77-13-04
Курган (3522)50-90-47
Липецк (4742)52-20-81
Магнитогорск (3519)55-03-13
Москва (495)268-04-70
Мурманск (8152)59-64-93
Набережные Челны (8552)20-53-41
Нижний Новгород (831)429-08-12
Новокузнецк (3843)20-46-81
Ноябрьск (3496)41-32-12
Новосибирск (383)227-86-73
Омск (3812)21-46-40
Орел (4862)44-53-42
Оренбург (3532)37-68-04
Пенза (8412)22-31-16
Петрозаводск (8142)55-98-37
Псков (8112)59-10-37
Пермь (342)205-81-47
Ростов-на-Дону (863)308-18-15
Рязань (4912)46-61-64
Самара (846)206-03-16
Санкт-Петербург (812)309-46-40
Саратов (845)249-38-78
Севастополь (8692)22-31-93
Саранск (8342)22-96-24
Симферополь (3652)67-13-56
Смоленск (4812)29-41-54
Сочи (862)225-72-31
Ставрополь (8652)20-65-13
Сургут (3462)77-98-35
Сыктывкар (8212)25-95-17
Тамбов (4752)50-40-97
Тверь (4822)63-31-35
Тольятти (8482)63-91-07
Томск (3822)98-41-53
Тула (4872)33-79-87
Тюмень (3452)66-21-18
Ульяновск (8422)24-23-59
Улан-Удэ (3012)59-97-51
Уфа (347)229-48-12
Хабаровск (4212)92-98-04
Чебоксары (8352)28-53-07
Челябинск (351)202-03-61
Череповец (8202)49-02-64
Чита (3022)38-34-83
Якутск (4112)23-90-97
Ярославль (4852)69-52-93

Россия +7(495)268-04-70
Казахстан +7(7172)727-132
Киргизия +996(312)96-26-47

https://mac.nt-rt.ru || mcp@nt-rt.ru