Алматы (7273)495-231
Ангарск (3955)60-70-56
Архангельск (8182)63-90-72
Астрахань (8512)99-46-04
Барнаул (3852)73-04-60
Белгород (4722)40-23-64
Благовещенск (4162)22-76-07
Брянск (4832)59-03-52
Владивосток (423)249-28-31
Владикавказ (8672)28-90-48
Владимир (4922)49-43-18
Волгоград (844)278-03-48
Вологда (8172)26-41-59
Воронеж (473)204-51-73
Екатеринбург (343)384-55-89
Иваново (4932)77-34-06
Ижевск (3412)26-03-58
Иркутск (395)279-98-46
Казань (843)206-01-48
Калининград (4012)72-03-81
Калуга (4842)92-23-67
Кемерово (3842)65-04-62
Киров (8332)68-02-04
Коломна (4966)23-41-49
Кострома (4942)77-07-48
Краснодар (861)203-40-90
Красноярск (391)204-63-61
Курск (4712)77-13-04
Курган (3522)50-90-47
Липецк (4742)52-20-81
Магнитогорск (3519)55-03-13
Москва (495)268-04-70
Мурманск (8152)59-64-93
Набережные Челны (8552)20-53-41
Нижний Новгород (831)429-08-12
Новокузнецк (3843)20-46-81
Ноябрьск (3496)41-32-12
Новосибирск (383)227-86-73
Омск (3812)21-46-40
Орел (4862)44-53-42
Оренбург (3532)37-68-04
Пенза (8412)22-31-16
Петрозаводск (8142)55-98-37
Псков (8112)59-10-37
Пермь (342)205-81-47
Ростов-на-Дону (863)308-18-15
Рязань (4912)46-61-64
Самара (846)206-03-16
Санкт-Петербург (812)309-46-40
Саратов (845)249-38-78
Севастополь (8692)22-31-93
Саранск (8342)22-96-24
Симферополь (3652)67-13-56
Смоленск (4812)29-41-54
Сочи (862)225-72-31
Ставрополь (8652)20-65-13
Сургут (3462)77-98-35
Сыктывкар (8212)25-95-17
Тамбов (4752)50-40-97
Тверь (4822)63-31-35
Тольятти (8482)63-91-07
Томск (3822)98-41-53
Тула (4872)33-79-87
Тюмень (3452)66-21-18
Ульяновск (8422)24-23-59
Улан-Удэ (3012)59-97-51
Уфа (347)229-48-12
Хабаровск (4212)92-98-04
Чебоксары (8352)28-53-07
Челябинск (351)202-03-61
Череповец (8202)49-02-64
Чита (3022)38-34-83
Якутск (4112)23-90-97
Ярославль (4852)69-52-93

Россия +7(495)268-04-70
Казахстан +7(7172)727-132
Киргизия +996(312)96-26-47

https://mac.nt-rt.ru || mcp@nt-rt.ru

MAC®

Series 6500

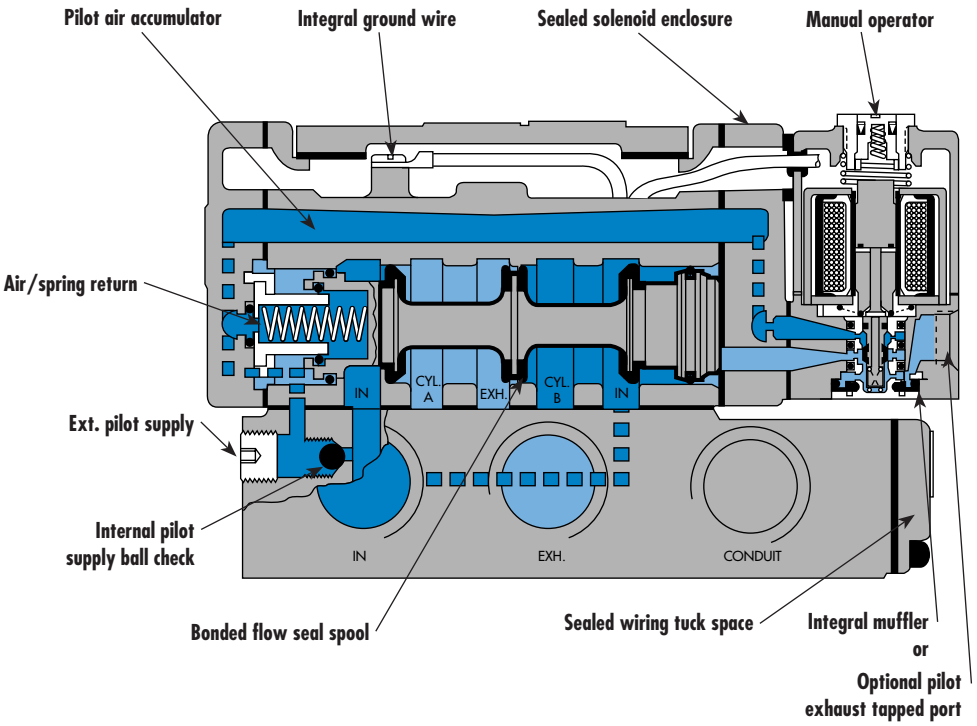

SERIES FEATURES

- The patented MACSOLENOID® with its non-burn out feature on AC service.
- A large checked accumulator for consistent shifting on single and double solenoid models.
- A plug-in design that provides for internal or external pilot with or without lights and all electrical and air plumbing in the base — the valve portion is the same.
- Non-lubricated or lubricated service.
- Optional low watttage DC solenoids down to 1 watt.
- Optional indicator lights, and various types of manual operators.
- Non plug-in or external plug-in models are available.

Consult "Precautions" page 364 before use, installation or service of MAC Valves

100% OF PRODUCTION TESTED 100%

WARRANTY 18 MONTHS

SPOOL CONFIGURATIONS

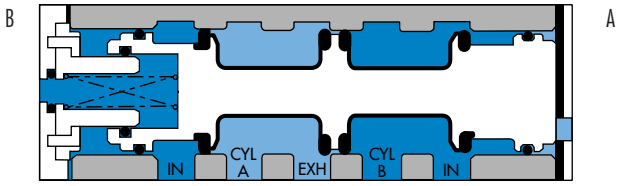

2 POS. SINGLE OPERATOR SPRING RETURN
B ACTUATED SHOWN

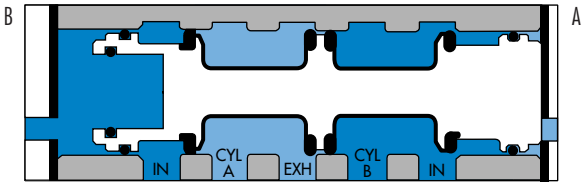

2 POS. DOUBLE OPERATOR
B ACTUATED SHOWN

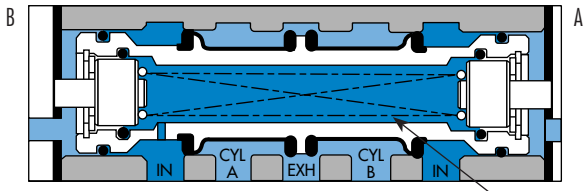

3 POS. OPEN CENTER
CENTER POSITION SHOWN

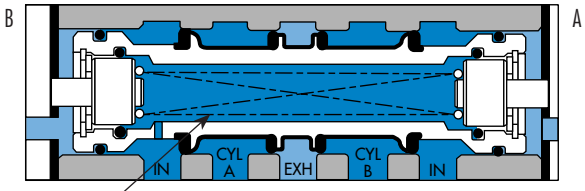

3 POS. CLOSED CENTER
CENTER POSITION SHOWN

AIR/SPRING
CENTERING

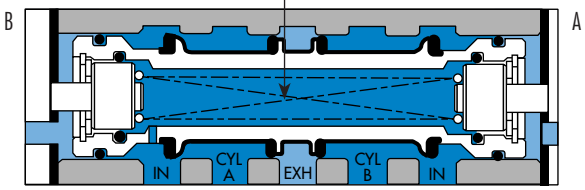

3 POS. PRESSURE CENTER
CENTER POSITION SHOWN

VALVE CONFIGURATIONS AVAILABLE

The versatile 6500 Series provides high flow, extremely fast response, and long life in a compact package and is available in the following configurations:

- 2-Pos., single or double operators (solenoid or remote air).
- 3-Pos., double operator-Closed Center, Open Center or Pressure Center (solenoid or remote air).
- Single pressure or dual pressure.
- Individual base or add-a-unit manifold base.
- Internal pilot or for Vacuum to 25 PSI main valve pressures, external pilot.
- Manual and mechanical operators available.

REMOTE AIR PILOT OPERATED VALVES

- A larged checked accumulator for air/spring return on single remote air models.
- All piping connections, including the remote air pilot supply, in the base.
- Non-lubricated or lubricated service.

REMOTE AIR PILOT, PILOT OPERATED VALVES

These special air versions have the same features as the remote air pilot operated models, but additionally feature:

- A manual operator and indicator.
- Ability to use a pilot signal pressure different from the main valve pressure. Pilot signal can be from 20 to 150 PSIG, regardless of main valve pressure.

ALL MODELS AVAILABLE WITH SANDWICH TYPE REGULATORS

Consult "Precautions" page 364 before use, installation or service of MAC Valves

Function	Port size	Flow (Max)	Individual mounting	Series
4/2 - 4/3	**3/8" - 1/2" - 3/4"**	**5.1 C_v**	sub-base non "plug-in"	

OPERATIONAL BENEFITS

1. Balanced spool, immune to variations of pressure.
2. Short stroke with high flow.
3. High shifting forces.
4. Checked accumulator guarantees maximum pilot pressure.
5. Powerful return force thanks to the combination of mechanical and air springs.
6. Bonded spool with minimum friction, shifting in a glass-like finished bore.
7. Wiping effect eliminates sticking.
8. Pilot valve with balanced poppet, high flow, short and consistent response times.

HOW TO ORDER

Port size	Pilot air	4/2 Single operator	4/2 Double operator	4/3 Closed center	4/3 Open center	4/3 Pressure center
		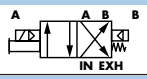	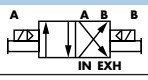	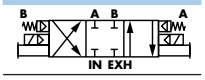	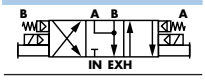	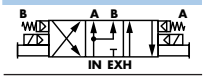
Valve less base		6512B-000-PM-*XXYZZ*	6522B-000-PM-*XXYZZ*	6532B-000-PM-*XXYZZ*	6542B-000-PM-*XXYZZ*	6552B-000-PM-*XXYZZ*
sub-base	Internal	6512B-131-PM-*XXYZZ*	6522B-131-PM-*XXYZZ*	6532B-131-PM-*XXYZZ*	6542B-131-PM-*XXYZZ*	6552B-131-PM-*XXYZZ*
3/8" NPTF	External	6512B-141-PM-*XXYZZ*	6522B-141-PM-*XXYZZ*	6532B-141-PM-*XXYZZ*	6542B-141-PM-*XXYZZ*	6552B-141-PM-*XXYZZ*
sub-base	Internal	6512B-231-PM-*XXYZZ*	6522B-231-PM-*XXYZZ*	6532B-231-PM-*XXYZZ*	6542B-231-PM-*XXYZZ*	6552B-231-PM-*XXYZZ*
1/2" NPTF	External	6512B-241-PM-*XXYZZ*	6522B-241-PM-*XXYZZ*	6532B-241-PM-*XXYZZ*	6542B-241-PM-*XXYZZ*	6552B-241-PM-*XXYZZ*
sub-base	Internal	6512B-331-PM-*XXYZZ*	6522B-331-PM-*XXYZZ*	6532B-331-PM-*XXYZZ*	6542B-331-PM-*XXYZZ*	6552B-331-PM-*XXYZZ*
3/4" NPTF	External	6512B-341-PM-*XXYZZ*	6522B-341-PM-*XXYZZ*	6532B-341-PM-*XXYZZ*	6542B-341-PM-*XXYZZ*	6552B-341-PM-*XXYZZ*

Note : Above codes shown are for side ports.

SOLENOID OPERATOR ➤ ***XX Y ZZ****

XX	Voltage
11	120/60, 110/50
12	240/60, 220/50
22	24/60, 24/50
59	24 VDC (2.5 W)
87	24 VDC (17.1 W)
61	24 VDC (8.5 W)

Y	Manual operator
1	Non-locking
2	Locking

ZZ	Electrical connection
JB	Rectangular connector
JD	Rectangular connector with light
JA	Square connector
JC	Square connector with light
BA	Flying leads (18")

Note : Photo shown with JC connector.

* Other options available, see page 357.

OPTIONS

6512B-XXX-PM-*XXYZZ*

- For piped pilot exhaust replace M by P.
- For dual pressure valve, replace by 4.

MODIFICATIONS		
MOD. N°	**DESCRIPTION**	**MODEL AVAILABILITY**
0002	Bottom inlet, exh. & cyl. ports (no side ports)	Available on individual base 3/8" & 1/2" only
0004	Full side porting and additional bottom inlet, exh. & cyl. ports	Available on individual base 3/8" only

Note :
1. The valve less base is always the same for internal or external pilot. These options are effected in the base.
2. Bottom ports : Refer to modification table.
3. To order bases without the valve, choose the base from the above table, then add 6500B as a prefix. Example 6500B-131.

Consult "Precautions" page 364 before use, installation or service of MAC Valves

100% OF PRODUCTION TESTED 100%

WARRANTY 18 MONTHS

TECHNICAL DATA

Fluid :	Compressed air, vacuum, inert gases		
Pressure range :	Internal pilot : single operator and 3 positions : 25-150 PSI		double operator : 10-150 PSI
	External pilot : vacuum to 150 PSI		
Pilot pressure :	Single operator and 3 positions : 25-150 PSI	Double operator : 10-150 PSI	
Lubrication :	Not required, if used select a medium aniline point lubricant (between 180°F to 210°F)		
Filtration :	40 µ		
Temperature range :	0°F to 120°F (-18°C to 50°C)		
Flow (at 6 bar, ΔP=1bar) :	3/8" : (4.5 C_V), 1/2" : (5.0 C_V), 3/4" : (5.1 C_V)		
Coil :	Epoxy encapsulated - class A wires - Continuous duty		
Voltage range :	-15% to +10% of nominal voltage		
Protection :	Consult factory		
Power :	~ Inrush : 14.8 VA	Holding : 10.9 VA	
	= 1 to 17.1 W		
Response times :	24 VDC (8.5 W)	Energize : 12 ms	De-energize : 12 ms
	120/60	Energize : 9-14 ms	De-energize : 11-18 ms

Spare parts : Solenoid operator (power ≥ 4 W) : D1-XXAA, cover mounting screws 35206 and seal 16234.
• Pilot valve : PME-XXYZZ, including seal 16337. • Pressure seal between valve and base : 16246.
• Mounting screw valve to base (x4) : 32201.

Options : • BSPP threads.

DIMENSIONS

Dimensions shown are metric (mm)

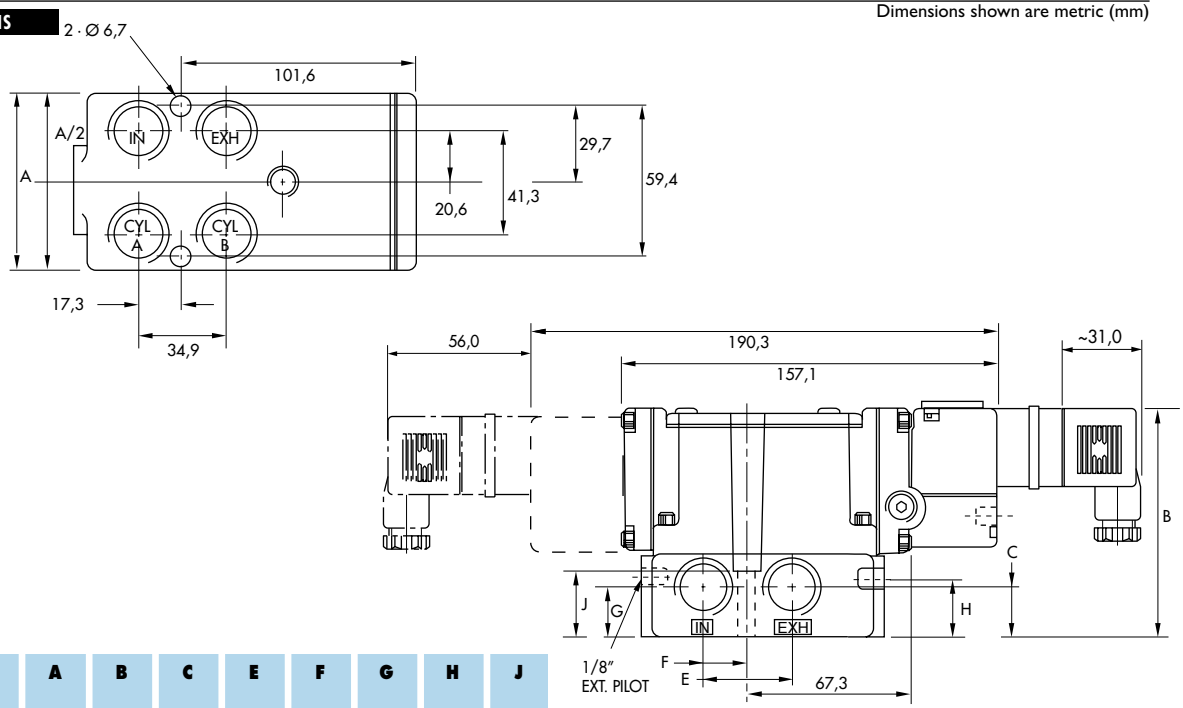

Port size	A	B	C	E	F	G	H	J
3/8" - 1/2"	69.6	97.4	18.3	36.0	17.9	19.0	23.6	25.4
3/4"	94.5	109.3	17.3	40.1	19.2	20.8	35.9	36.6

Consult "Precautions" page 364 before use, installation or service of MAC Valves

Function	Port size	Flow (Max)	Individual mounting
4/2 - 4/3	**3/8" - 1/2" - 3/4"**	**5.1 C_v**	sub-base "plug-in"

OPERATIONAL BENEFITS

1. Balanced spool, immune to variations of pressure.
2. Short stroke with high flow.
3. High shifting forces.
4. Checked accumulator guarantees maximum pilot pressure.
5. Powerful return force thanks to the combination of mechanical and air springs.
6. Bonded spool with minimum friction, shifting in a glass-like finished bore.
7. Wiping effect eliminates sticking.
8. Pilot valve with balanced poppet, high flow, short and consistent response times.

HOW TO ORDER

Port size	Pilot air	4/2 Single operator	4/2 Double operator	4/3 Closed center	4/3 Open center	4/3 Pressure center
		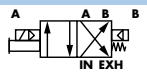	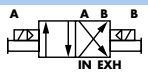	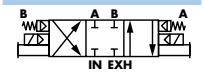	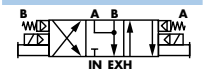	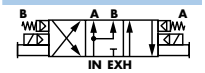
Valve less base		6511B-000-PM-*XXY*DA	6521B-000-PM-*XXY*DA	6531B-000-PM-*XXY*DA	6541B-000-PM-*XXY*DA	6551B-000-PM-*XXY*DA
sub-base	Internal	6511B-111-PM-*XXY*DA	6521B-111-PM-*XXY*DA	6531B-111-PM-*XXY*DA	6541B-111-PM-*XXY*DA	6551B-111-PM-*XXY*DA
3/8" NPTF	External	6511B-121-PM-*XXY*DA	6521B-121-PM-*XXY*DA	6531B-121-PM-*XXY*DA	6541B-121-PM-*XXY*DA	6551B-121-PM-*XXY*DA
sub-base	Internal	6511B-211-PM-*XXY*DA	6521B-211-PM-*XXY*DA	6531B-211-PM-*XXY*DA	6541B-211-PM-*XXY*DA	6551B-211-PM-*XXY*DA
1/2" NPTF	External	6511B-221-PM-*XXY*DA	6521B-221-PM-*XXY*DA	6531B-221-PM-*XXY*DA	6541B-221-PM-*XXY*DA	6551B-221-PM-*XXY*DA
sub-base	Internal	6511B-311-PM-*XXY*DA	6521B-311-PM-*XXY*DA	6531B-311-PM-*XXY*DA	6541B-311-PM-*XXY*DA	6551B-311-PM-*XXY*DA
3/4" NPTF	External	6511B-321-PM-*XXY*DA	6521B-321-PM-*XXY*DA	6531B-321-PM-*XXY*DA	6541B-321-PM-*XXY*DA	6551B-321-PM-*XXY*DA

Note : Above codes shown are for side ports without lights.

SOLENOID OPERATOR ➤ ***XX Y*** DA *

XX	Voltage
11	120/60, 110/50
12	240/60, 220/50
22	24/60, 24/50
59	24 VDC (2.5 W)
87	24 VDC (17.1 W)
61	24 VDC (8.5 W)

Y	Manual operator
1	Non-locking
2	Locking

* Other options available, see page 357.

OPTIONS

6511B-XXX-PM-*XXY*DA

- For piped pilot exhaust replace M by P.
- For dual pressure valve replace by 4 (no light), by 5 (sgl. light), by 6 (dbl. light).
- For lights on base, replace by 2 (sgl. light), by 3 (dbl. light).
- For lights on valve body, replace by 3.

MODIFICATIONS		
MOD. N°	**DESCRIPTION**	**MODEL AVAILABILITY**
0002	Bottom inlet, exh. & cyl. ports (no side ports)	Available on individual base 3/8" & 1/2" only
0004	Full side porting and additional bottom inlet, exh. & cyl. ports	Available on individual base 3/8" only

Note :
1. The valve less base is always the same for internal or external pilot. These options are effected in the base.
2. Bottom ports : Refer to modification table.
3. To order bases without the valve, choose the base from the above table, then add 6500B as a prefix. Example 6500B-111.

35
100
200
55
56
57
58
59
45
700
900
82
6300
6500
6600
1300
800
ISO 1
ISO 2
ISO 3
MAC 125A
MAC 250A
MAC 500A

Consult "Precautions" page 364 before use, installation or service of MAC Valves

MAC

Series 6500

100% OF PRODUCTION TESTED 100%

WARRANTY 18 MONTHS

TECHNICAL DATA

Fluid :	Compressed air, vacuum, inert gases		
Pressure range :	Internal pilot : single operator and 3 positions : 25-150 PSI External pilot : vacuum to 150 PSI	double operator : 10-150 PSI	
Pilot pressure :	Single operator and 3 positions : 25-150 PSI	Double operator : 10-150 PSI	
Lubrication :	Not required, if used select a medium aniline point lubricant (between 180°F to 210°F)		
Filtration :	40 µ		
Temperature range :	0°F to 120°F (-18°C to 50°C)		
Flow (at 6 bar, ΔP=1bar) :	3/8" : (4.5 C_v), 1/2" : (5.0 C_v), 3/4" : (5.1 C_v)		
Coil :	Epoxy encapsulated - class A wires - Continuous duty		
Voltage range :	-15% to +10% of nominal voltage		
Protection :	Consult factory		
Power :	~ Inrush : 14.8 VA = 1 to 17.1 W	Holding : 10.9 VA	
Response times :	24 VDC (8.5 W)	Energize : 12 ms	De-energize : 12 ms
	120/60	Energize : 9-14 ms	De-energize : 11-18 ms

Spare parts :

- Solenoid operator (power ≥ 4 W) : D1-XXBE, cover mounting screws 35206 and seal 16234.
- Pilot valve : PME-XXYDA-BE, including seal 16337. • Pressure seal between valve and base : 16246.
- Mounting screw valve to base (x4) : 32201.

Options :

- BSPP threads.

DIMENSIONS

Dimensions shown are metric (mm)

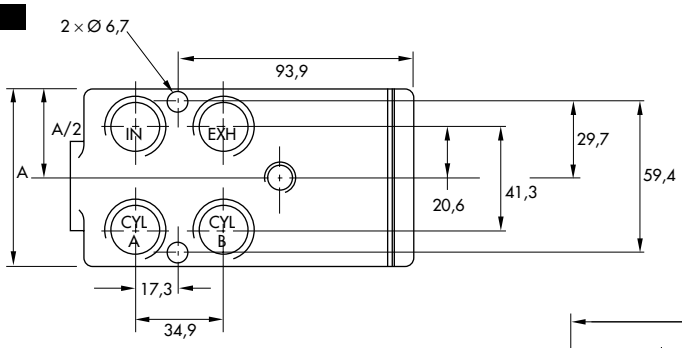

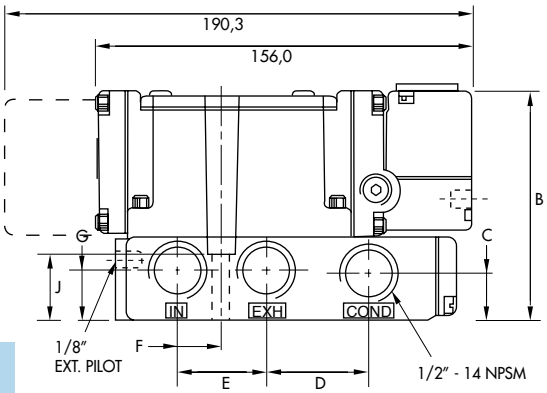

Port size	A	B	C	D	E	F	G	H	J
3/8" - 1/2"	69.6	97.4	18.3	40.6	36.0	17.9	19.0	23.6	25.4
3/4"	94.5	109.3	17.3	46.7	40.1	19.2	20.8	35.9	36.6

Consult "Precautions" page 364 before use, installation or service of MAC Valves

Function	Port size	Flow (Max)	Manifold mounting	Series
4/2 - 4/3	**3/8" - 1/2" - 3/4"**	**5.1 C_v**	sub-base non "plug-in"	

OPERATIONAL BENEFITS

1. Balanced spool, immune to variations of pressure.
2. Short stroke with high flow.
3. High shifting forces.
4. Checked accumulator guarantees maximum pilot pressure.
5. Powerful return force thanks to the combination of mechanical and air springs.
6. Bonded spool with minimum friction, shifting in a glass-like finished bore.
7. Wiping effect eliminates sticking.
8. Pilot valve with balanced poppet, high flow, short and consistent response times.

HOW TO ORDER

Port size	Pilot air	4/2 Single operator	4/2 Double operator	4/3 Closed center	4/3 Open center	4/3 Pressure center
		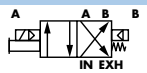	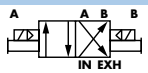	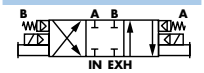	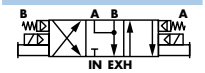	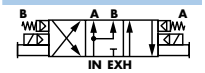
Valve less base		6512B-000-PM-*XXYZZ*	6522B-000-PM-*XXYZZ*	6532B-000-PM-*XXYZZ*	6542B-000-PM-*XXYZZ*	6552B-000-PM-*XXYZZ*
sub-base	Internal	6512B-431-PM-*XXYZZ*	6522B-431-PM-*XXYZZ*	6532B-431-PM-*XXYZZ*	6542B-431-PM-*XXYZZ*	6552B-431-PM-*XXYZZ*
3/8" NPTF	External	6512B-441-PM-*XXYZZ*	6522B-441-PM-*XXYZZ*	6532B-441-PM-*XXYZZ*	6542B-441-PM-*XXYZZ*	6552B-441-PM-*XXYZZ*
sub-base	Internal	6512B-531-PM-*XXYZZ*	6522B-531-PM-*XXYZZ*	6532B-531-PM-*XXYZZ*	6542B-531-PM-*XXYZZ*	6552B-531-PM-*XXYZZ*
1/2" NPTF	External	6512B-541-PM-*XXYZZ*	6522B-541-PM-*XXYZZ*	6532B-541-PM-*XXYZZ*	6542B-541-PM-*XXYZZ*	6552B-541-PM-*XXYZZ*
sub-base	Internal	6512B-631-PM-*XXYZZ*	6522B-631-PM-*XXYZZ*	6532B-631-PM-*XXYZZ*	6542B-631-PM-*XXYZZ*	6552B-631-PM-*XXYZZ*
3/4" NPTF	External	6512B-641-PM-*XXYZZ*	6522B-641-PM-*XXYZZ*	6532B-641-PM-*XXYZZ*	6542B-641-PM-*XXYZZ*	6552B-641-PM-*XXYZZ*

Note : Above codes shown are for side cylinder ports.

SOLENOID OPERATOR ➤ ***XX Y ZZ****

XX	Voltage
11	120/60, 110/50
12	240/60, 220/50
22	24/60, 24/50
59	24 VDC (2.5 W)
87	24 VDC (17.1 W)
61	24 VDC (8.5 W)

Y	Manual operator
1	Non-locking
2	Locking

ZZ	Electrical connection
JB	Rectangular connector
JD	Rectangular connector with light
JA	Square connector
JC	Square connectorwith light
BA	Flying leads (18")

Note : Photo shown with JC connector.

* Other options available, see page 357.

OPTIONS

6512B-XXX-PM-*XXYZZ*

- For piped pilot exhaust replace M by P.
- For dual pressure valve, replace by 4.

MODIFICATIONS

MOD. N°	DESCRIPTION	MODEL AVAILABILITY
0112	Side inlet & exhaust with bottom cyl. ports (No end cyl. ports)	Available on all manifold models
0210	Porting as ordered in model number plus an additional bottom inlet	Available on all manifold models
0364	Sgl. pressure — side inlet & exh. and additional bottom inlet with bottom cyl. ports (No end cyl. ports) DUAL PRESSURE — Same as sgl. pressure except with two bottom inlets.	Available on all manifold models

Note :
1. The valve less base is always the same for internal or external pilot. These options are effected in the manifold.
2. Bottom ports : Refer to modification table.
3. To order manifolds without the valve, choose the manifold from the above table, then add 6500B as a prefix. Example 6500B-431.

Consult "Precautions" page 364 before use, installation or service of MAC Valves

100% OF PRODUCTION TESTED 100%

WARRANTY 18 MONTHS

TECHNICAL DATA

Fluid :	Compressed air, vacuum, inert gases		
Pressure range :	Internal pilot : single operator and 3 positions : 25-150 PSI		double operator : 10-150 PSI
	External pilot : vacuum to 150 PSI		
Pilot pressure :	Single operator and 3 positions : 25-150 PSI	Double operator : 10-150 PSI	
Lubrication :	Not required, if used select a medium aniline point lubricant (between 180°F to 210°F)		
Filtration :	40 µ		
Temperature range :	0°F to 120°F (-18°C to 50°C)		
Flow (at 6 bar, ΔP=1bar) :	3/8" : (4.5 C_v), 1/2" : (5.0 C_v), 3/4" : (5.1 C_v)		
Coil :	Epoxy encapsulated - class A wires - Continuous duty		
Voltage range :	-15% to +10% of nominal voltage		
Protection :	Consult factory		
Power :	~ Inrush : 14.8 VA	Holding : 10.9 VA	
	= 1 to 17.1 W		
Response times :	24 VDC (8.5 W)	Energize : 12 ms	De-energize : 12 ms
	120/60	Energize : 9-14 ms	De-energize : 11-18 ms

Spare parts :

- Solenoid operator (power ≥ 4 W) : D1-XXAA, cover mounting screws 35206 and seal 16234.
- Pilot valve : PME-XXYZZ, including seal 16337. • Pressure seal between valve and base : 16246.
- Mounting screw valve to base (x4) : 32201. • Tie-rod (x2) : 19540. • Fastening kit : N-65002-01
- Inlet isolator : 28309. • Exhaust isolator : 28310. • Blank station cover plate : N-65009.

Options :

- BSPP threads.

DIMENSIONS

Dimensions shown are metric (mm)

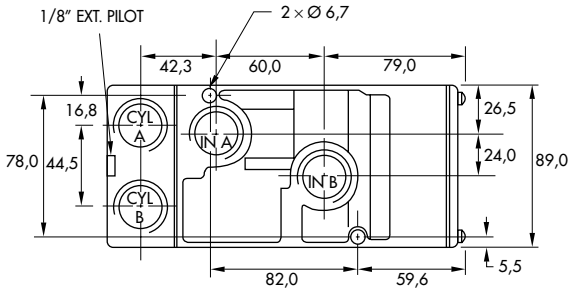

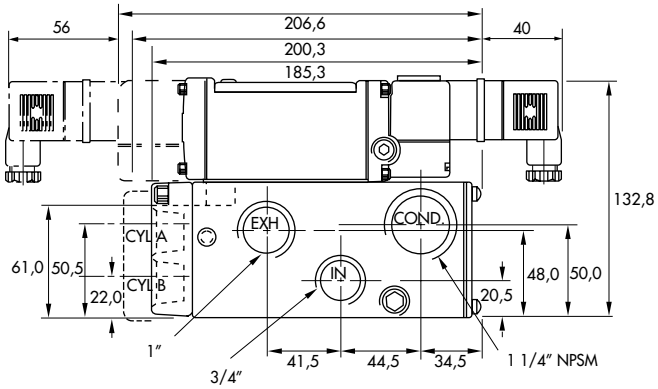

Consult "Precautions" page 364 before use, installation or service of MAC Valves

Function	Port size	Flow (Max)	Manifold mounting	Series
4/2 - 4/3	**3/8" - 1/2" - 3/4"**	**5.1 C_v**	sub-base "plug-in"	

OPERATIONAL BENEFITS

1. Balanced spool, immune to variations of pressure.
2. Short stroke with high flow.
3. High shifting forces.
4. Checked accumulator guarantees maximum pilot pressure.
5. Powerful return force thanks to the combination of mechanical and air springs.
6. Bonded spool with minimum friction, shifting in a glass-like finished bore.
7. Wiping effect eliminates sticking.
8. Pilot valve with balanced poppet, high flow, short and consistent response times.

HOW TO ORDER

Port size	Pilot air	4/2 Single operator	4/2 Double operator	4/3 Closed center	4/3 Open center	4/3 Pressure center
		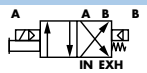	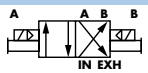	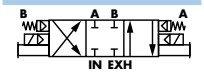	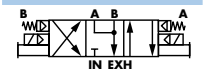	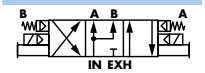
Valve less base		6511B-000-PM-*XXY*DA	6521B-000-PM-*XXY*DA	6531B-000-PM-*XXY*DA	6541B-000-PM-*XXY*DA	6551B-000-PM-*XXY*DA
sub-base	Internal	6511B-411-PM-*XXY*DA	6521B-411-PM-*XXY*DA	6531B-411-PM-*XXY*DA	6541B-411-PM-*XXY*DA	6551B-411-PM-*XXY*DA
3/8" NPTF	External	6511B-421-PM-*XXY*DA	6521B-421-PM-*XXY*DA	6531B-421-PM-*XXY*DA	6541B-421-PM-*XXY*DA	6551B-421-PM-*XXY*DA
sub-base	Internal	6511B-511-PM-*XXY*DA	6521B-511-PM-*XXY*DA	6531B-511-PM-*XXY*DA	6541B-511-PM-*XXY*DA	6551B-511-PM-*XXY*DA
1/2" NPTF	External	6511B-521-PM-*XXY*DA	6521B-521-PM-*XXY*DA	6531B-521-PM-*XXY*DA	6541B-521-PM-*XXY*DA	6551B-521-PM-*XXY*DA
sub-base	Internal	6511B-611-PM-*XXY*DA	6521B-611-PM-*XXY*DA	6531B-611-PM-*XXY*DA	6541B-611-PM-*XXY*DA	6551B-611-PM-*XXY*DA
3/4" NPTF	External	6511B-621-PM-*XXY*DA	6521B-621-PM-*XXY*DA	6531B-621-PM-*XXY*DA	6541B-621-PM-*XXY*DA	6551B-621-PM-*XXY*DA

Note : Above codes shown are for side cylinder ports without lights.

SOLENOID OPERATOR ➤ ***XX Y*** DA *

XX	Voltage
11	120/60, 110/50
12	240/60, 220/50
22	24/60, 24/50
59	24 VDC (2.5 W)
87	24 VDC (17.1 W)
61	24 VDC (8.5 W)

Y	Manual operator
1	Non-locking
2	Locking

* Other options available, see page 357.

OPTIONS

6511B-XXX-PM-*XXY*DA

- For piped pilot exhaust replace M by P.
- For lights on valve body, replace by 3.
- For dual pressure valve replace by 4 (no light), by 5 (sgl. light), by 6 (dbl. light).
- For lights on manifold, replace by 2 (sgl. light), by 3 (dbl. light).

MODIFICATIONS

MOD. N°	DESCRIPTION	MODEL AVAILABILITY
0112	Side inlet & exhaust with bottom cyl. ports (No end cyl. ports)	Available on all manifold models
0210	Porting as ordered in model number plus an additional bottom inlet	Available on all manifold models
0364	Sgl. pressure — side inlet & exh. and additional bottom inlet with bottom cyl. ports (No end cyl. ports) DUAL PRESSURE — Same as sgl. pressure except with two bottom inlets.	Available on all manifold models

Note :
1. The valve less base is always the same for internal or external pilot. These options are effected in the manifold.
2. Bottom ports : Refer to modification table.
3. To order manifolds without the valve, choose the manifold from the above table, then add 6500B as a prefix. Example 6500B-411.

Consult "Precautions" page 364 before use, installation or service of MAC Valves

100% OF PRODUCTION TESTED 100%

WARRANTY 18 MONTHS

TECHNICAL DATA

Fluid :	Compressed air, vacuum, inert gases		
Pressure range :	Internal pilot : single operator and 3 positions : 25-150 PSI External pilot : vacuum to 150 PSI	double operator : 10-150 PSI	
Pilot pressure :	Single operator and 3 positions : 25-150 PSI	Double operator : 10-150 PSI	
Lubrication :	Not required, if used select a medium aniline point lubricant (between 180°F to 210°F)		
Filtration :	40 µ		
Temperature range :	0°F to 120°F (-18°C to 50°C)		
Flow (at 6 bar, ΔP=1bar) :	3/8" : (4.5 C_v), 1/2" : (5.0 C_v), 3/4" : (5.1 C_v)		
Coil :	Epoxy encapsulated - class A wires - Continuous duty		
Voltage range :	-15% to +10% of nominal voltage		
Protection :	Consult factory		
Power :	~ Inrush : 14.8 VA = 1 to 17.1 W	Holding : 10.9 VA	
Response times :	24 VDC (8.5 W)	Energize : 12 ms	De-energize : 12 ms
	120/60	Energize : 9-14 ms	De-energize : 11-18 ms

Spare parts :

- Solenoid operator (power ≥ 4 W) : D1-XXBE, cover mounting screws 35206 and seal 16234.
- Pilot valve : PME-XXYDA-BE, including seal 16337. • Pressure seal between valve and base : 16246.
- Mounting screw valve to base (x4) : 32201. • Tie-rod (x2) : 19540. • Fastening kit : N-65002-01
- Inlet isolator : 28309. • Exhaust isolator : 28310. • Blank station cover plate : N-65009.

Options :

- BSPP threads.

DIMENSIONS

Dimensions shown are metric (mm)

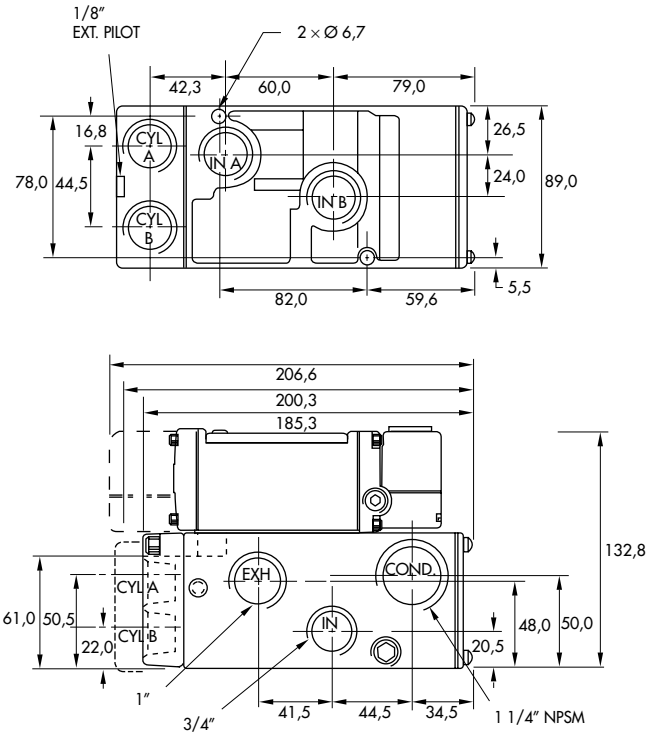

Consult "Precautions" page 364 before use, installation or service of MAC Valves

HOW TO ORDER

BODY/BASE OPTIONS

65 X X B — SERIES; REVISION LEVEL

Y Y Y - (XX-XXYZZ) - SOLENOID PILOT OPTIONS
SEE BELOW

FUNCTION

1	Single solenoid
2	Double solenoid
3	3 position closed center
4	3 position open center
5	3 position pressure center

BODY TYPE

1	Plug-in
2	Non plug-in

PORTING OPTIONS

0	Valve only - no base
1	Single pressure
4	Dual pressure

For use with Sandwich Regulators use Single Pressure option

PORT SIZE

0	Valve only - no base
1	3/8" base
2	1/2" base
3	3/4" base
4	3/8" manifold
5	1/2" manifold
6	3/4" manifold

PILOT AIR

0	Valve only - no base
Solenoid Plug-In NPT	
1	Internal pilot
2	External pilot
Solenoid Non Plug-In	
3	Internal pilot
4	External pilot
5-8	For BSPP respectively

PILOT VALVE OPTIONS

XX - XXYZZ

XX PILOT EXHAUST

FM	Muffled exhaust
FP	Piped exhaust

XX DC VOLTAGE

A5	12 VDC (0.6 W)
A6	24 VDC (0.6 W)

Y MANUAL OPERATOR

0	No operator
1	Non-locking Recessed (std.)
2	Locking Recessed
3	Non-locking Extended
4	Locking Extended

ZZ ELECTRICAL CONN.

DA	Plug-in (standard)
Non Plug-In	
BA	Grommet
CA	Conduit 1/2" NPS
JB	Rectangular Plug-in
JM	Rectangular Male only
JA	Square Plug-in
JJ	Square Male only

NOTE:
1. The valve less base is always the same for internal or external pilot. These options are effected in the base or manifold.
2. Bottom ports: Refer to modification table below.
3. Manifold Accessories: Inlet Isolator #28309. Exhaust Isolator #28310.

MODIFICATIONS

MOD. NO.	DESCRIPTION	MODEL AVAILABILITY
0002	Bottom inlet, exhaust, & cylinder ports (no side ports)	Available on individual base 3/8" & 1/2" only
0004	Full side porting and additional bottom inlet, exhausts, and cylinder ports	Available on individual base 3/8" only
0112	Side inlet & exhaust with bottom cylinder ports (no end cylinder ports)	Available on all manifold models
0210	Porting as ordered in model number plus an additional bottom inlet	Available on all manifold models
0364	Single Pressure - Side inlet & exhaust and additional bottom inlet with bottom cylinder ports (no end cylinder ports) Dual Pressure - Same as single pressure except with two bottom inlets	Available on all manifold models

Consult "Precautions" page 364 before use, installation or service of MAC Valves

Codification table for voltages / Manual operator / Electrical connection / Wire length

VALVE CODE ➤ **- XX Y ZZ (-VV)**
1 2 3 4

OPTIONS AVAILABLE FOR	OPTIONS AVAILABLE FOR
- valves type 100 Series - pilot valves "CNOMO"	- valves type 200 Series
- Pilot operated valves with pilots type 100 Series Series : 55 - 56 - 700 - 800 - 900 - 6300 - 6500 - 6600 - 1300 - ISO 1 - ISO 2 - ISO 3. - MAC 125 - MAC 250 - MAC 500	- pilot operated valves with pilots type 200 Series Series : 200 - 57 - 58 - 59.
- Pilot operated valves with pilots "CNOMO" Series : ISO1 - ISO2 - ISO3	

Consult "Precautions" page 364 before use, installation or service of MAC Valves

Used on valve series: 100, 55, 56, 700, 800, 900, 6300, 6500, 6600, 1300, MVA1C, MVA2B, MVA3B, MAC125, MAC250, MAC500.

1. VOLTAGE (100 Serie type coil)

- XX Y ZZ	VOLTAGE
11	120/60, 110/50
12	240/60, 220/50
13	100/60, 100/50
15	200/60, 200 /50
16	10/60
20	6/60
21	12/50, 12/60
22	24/60, 24/50
23	32/60, 32/50
24	48/60, 42/50
26*	380/50, 440/50, 440/60, 480/60
29	220/60
34	127/50, 120/50
35	48/50
36	16/60
B1	24/50
50	24 VDC (6 W)
51	24 VDC (4 W)
54	12 VDC (4 W)
55	12 VDC (6 W)
57	12 VDC (2.5 W)
59	24 VDC (2.5 W)
60	12 VDC (8.5 W)
61	24 VDC (8.5 W)
64	6 VDC (6 W)
65	32 VDC (7 W)
66	48 VDC (5.8 W)
67	64 VDC (7.5 W)
68	120 VDC (6.4 W)
69*	220 VDC (8.7 W), 250 VDC (11.2 W)
75	90 VDC (8.8 W)
76*	100 VDC (6.9 W)
84*	125 VDC (10.9 W)
87*	24 VDC (17.1 W)
88*	12 VDC (17.4 W)
89*	36 VDC (18.8 W)
90	28 VDC (8.2 W)
91*	6 VDC (10.6 W)
92	190 VDC (6.5 W)
94	3 VDC (7 W)
95	38 VDC (6.4 W)
A1	24 VDC (1 W)
A2	12 VDC (1 W)
A3	9 VDC (1 W)

MOD. DD01 : Protection diode (DC) - MAX. 8.5W

MOD. MOV1 : Protection varistor (AC) - MAX. 8.5W

* Voltages are CLSF only

Used on valve series: 200, 57, 58, 59.

1. VOLTAGE (200 Serie type coil)

- XX Y ZZ	VOLTAGE
11	120/60, 110/50, 24 VDC (6 W)
12	240/60, 220/50
13	100/60, 100/50
14	200/60, 200/50
20	6/60
21	12/60
22	24/60, 24/50
23	32/60, 32/50
24	48/60, 42/50
25	240/50
26	480/60, 440/50
27	127/60
28	415/50
29	220/60
30	380/50
31	550/60, 550/50
32	120/60, 110/50
33	600/60
34	127/50
35	48/50
50	24 VDC (6 W)
51	24 VDC (4.5 W)
52	24 VDC (2.5 W)
53	24 VDC (1.0 W)
55	12 VDC (6 W)
57	12 VDC (2.5 W)
58	48 VDC (2.5 W)
60	12 VDC (9.5 W)
61	24 VDC (8.5 W)
64	6 VDC (8.5 W)
65	32 VDC (10 W)
66	48 VDC (11.5 W)
67	64 VDC (10.5 W)
68	120 VDC (12.3 W)
69	250 VDC (9.2 W)
71	8 VDC (8.2 W)
72	24 VDC (12 W)
73	198 VDC (10 W)
74	72 VDC (11.3 W)
75	90 VDC (11.3 W)
76	100 VDC (9 W)
77	220 VDC (10 W), 230 VDC (11.6 W)
78*	24 VDC (24 W)
80	55 VDC (10.6 W)
82	170 VDC (11.1 W)
83	15 VDC (8.1 W)
84	125 VDC (10 W)
86	36 VDC (11 W)
93*	12 VDC (24 W)

Consult "Precautions" page 364 before use, installation or service of MAC Valves

2. MANUAL OPERATOR (Common options for 100 & 200 Series type coils)

- XX Y ZZ	MANUAL OPERATOR		
0	No operator	5*	No Operator with Light
1	Non-locking recessed	6*	Non-Locking Recessed with Light
2	Locking recessed	7*	Locking Recessed with Light
3	Non-locking extended	8*	Non-Locking Extended with Light
4	Locking extended	9*	Locking Extended with Light

* Lights used with "AA" electrical connection

3. ELECTRICAL CONNECTION (100 Serie type coil)

- XX Y ZZ	ELECTRICAL CONNECTION
AA	Wiring box with 1/2" NPS conduit
BA	Flying leads
CA	1/2" NPS conduit
CC	1/2" NPT conduit
FA	Military type 2 PIN
GA	Military type 3 PIN
HA	AA with ground wire
JA*	Square connector
JB	Rectangular connector
JC*	Square connector with light
JD	Rectangular connector with light
JE	Square connector on top (ISO2, ISO3)
JF	Rectangular connector on top (ISO1, ISO2, ISO3)
JG	JE with light
JH	JF with light
JJ	Square connector, male only
JM	Rectangular connector, male only
MA	Electrical common conduit (100 Series-Manifold/900 Series)
MB	Electrical common conduit (100 Series-Stacking/700 Series)
NA	CA with ground wire
NC	CC with ground wire
RA	3/8" NPS conduit

* Not to be used with 100, 800 and 900 Series manifold mounting

3. ELECTRICAL CONNECTION (200 Serie type coil)

- XX Y ZZ	ELECTRICAL CONNECTION
AA	Wiring box with 1/2" NPS conduit
BA	Flying leads
CA	1/2" NPS conduit
CC	1/2" NPT conduit
EA	Explosion proof (200 Series)
EA	Explosion proof (57, 58 & 59 Series)
FA	Military type 2 PIN
GA	Military type 3 PIN
HA	AA with ground wire
JA*	Square connector
JC	Square connector with light
JJ	Square connector, male only
NA	CA with ground wire
NC	CC with ground wire

MAC OPTIONS

4. COIL WIRE LENGTH (Common options for 100 & 200 Serie type coils)

- XX Y ZZ (-VV)	WIRE LENGTH
AA	18″
AB	24″
AD	36″
AE	48″
AF	72″
AG	6″
AR	12″
AU	120″
BA	60″
BB	144″
Series 6000 : wire length, from the base	
MOD L024	24″
MOD L036	36″
MOD L048	48″
MOD L060	60″
MOD L072	72″
MOD L120	120″

Алматы (7273)495-231
Ангарск (3955)60-70-56
Архангельск (8182)63-90-72
Астрахань (8512)99-46-04
Барнаул (3852)73-04-60
Белгород (4722)40-23-64
Благовещенск (4162)22-76-07
Брянск (4832)59-03-52
Владивосток (423)249-28-31
Владикавказ (8672)28-90-48
Владимир (4922)49-43-18
Волгоград (844)278-03-48
Вологда (8172)26-41-59
Воронеж (473)204-51-73
Екатеринбург (343)384-55-89
Иваново (4932)77-34-06
Ижевск (3412)26-03-58
Иркутск (395)279-98-46
Казань (843)206-01-48
Калининград (4012)72-03-81
Калуга (4842)92-23-67
Кемерово (3842)65-04-62
Киров (8332)68-02-04
Коломна (4966)23-41-49
Кострома (4942)77-07-48
Краснодар (861)203-40-90
Красноярск (391)204-63-61
Курск (4712)77-13-04
Курган (3522)50-90-47
Липецк (4742)52-20-81
Магнитогорск (3519)55-03-13
Москва (495)268-04-70
Мурманск (8152)59-64-93
Набережные Челны (8552)20-53-41
Нижний Новгород (831)429-08-12
Новокузнецк (3843)20-46-81
Ноябрьск (3496)41-32-12
Новосибирск (383)227-86-73
Омск (3812)21-46-40
Орел (4862)44-53-42
Оренбург (3532)37-68-04
Пенза (8412)22-31-16
Петрозаводск (8142)55-98-37
Псков (8112)59-10-37
Пермь (342)205-81-47
Ростов-на-Дону (863)308-18-15
Рязань (4912)46-61-64
Самара (846)206-03-16
Санкт-Петербург (812)309-46-40
Саратов (845)249-38-78
Севастополь (8692)22-31-93
Саранск (8342)22-96-24
Симферополь (3652)67-13-56
Смоленск (4812)29-41-54
Сочи (862)225-72-31
Ставрополь (8652)20-65-13
Сургут (3462)77-98-35
Сыктывкар (8212)25-95-17
Тамбов (4752)50-40-97
Тверь (4822)63-31-35
Тольятти (8482)63-91-07
Томск (3822)98-41-53
Тула (4872)33-79-87
Тюмень (3452)66-21-18
Ульяновск (8422)24-23-59
Улан-Удэ (3012)59-97-51
Уфа (347)229-48-12
Хабаровск (4212)92-98-04
Чебоксары (8352)28-53-07
Челябинск (351)202-03-61
Череповец (8202)49-02-64
Чита (3022)38-34-83
Якутск (4112)23-90-97
Ярославль (4852)69-52-93

Россия +7(495)268-04-70
Казахстан +7(7172)727-132
Киргизия +996(312)96-26-47

https://mac.nt-rt.ru || mcp@nt-rt.ru